DOCUMENT DATA FORM **Your Name: Nick Carino**

Document Title or Description (max. 254 characters): Circle: Same as cover (or fill in below)

Drawing Book 8, Chapter 8: Miscellaneous Details Below grade

Include work order no. and floor no. if applicable

Roll # DB03	**Doc. ID (report #, dwg. #):**	
Document Date: 1968-74	**Document Author Name:**	**Author Organization:** SHC&R

KEYWORDS – HIGHLIGHT ALL THAT APPLY

Level 1

Bankers Trust	Project 4	WTC 1 - North Tower	Add
(Below Grade)	Project 5	WTC 2 - South Tower	
Concourse	Project 6	WTC 3 - Marriot Hotel	
Electrical Substation	Project 7	WTC 4 - South Plaza Bldg.	
Liberty Plaza	Project 8	WTC 5 - North Plaza Bldg	
PATH Station	WFC 1 - Oppenhiemer Dow	WTC 6 - Customs House	
PATH Terminal	WFC 2 - Tower B	WTC 7	
Project 1	WFC 3 - American Express	WTC Complex	
Project 2	WFC 4 - Tower D	WTC Plaza	
Project 3			

Level 2

Accident analysis & risk	Fire protection	Misc. Performance Problems	(Structural)
Architectural	Fire service	News coverage	Tenant alterations
Data request	Landscaping	Police	Tenant Space
Emergency management	Management	Security	Add
Evacuation	Mech./elec.		

Level 3

1993 explosion	Cranes	Frame	Roof	Weight
A/E fitout	Criteria	Frame analysis	Safety	Weld detail
A-242	Dampers	Frequency	Schedule	Weld size
A-36	Debris	Fuel	Sculpture	Welding
A-497	Deck	Furniture layout	Security system	Wind
Aircraft impact	Deflection	Generators	Shear knuckle	Windows
Air cooled condensers	Demolition	Guidelines	Shear test	Yield strength
Analysis	Design	Gypsum board	Shear Stud	Add
Angles	(Detailing)	Hat truss	Shop drawings	(Drawing books)
Antenna	Doors	Human comfort	Shortening	
Artifacts	Drawings	HVAC	Slab	
Asbestos	Eastern States Steel	Index	Slurry wall	
Base plate	Egress	Inspection	Smoke control	
Beams	Elevator	Insulation	Smoke test	
Bid documents	Elevator Shaft	Job number	Spandrel beam	
Bid Invitation	Emergency	Joist	Specifications	
Bow tie	communications	L-50	Splices	
Bracing	Equipment	Lighting	Sprinkler	
Bridging truss	Erection marks	Loads	Stability	
Building code	Errors & Omissions	Maintenance	Stairways	
Calculations	Escalator	Marking	Standards	
Carpet	Expansion joint	Mesh reinforcement	Steel	
Ceilings	Exterior columns	Mill inspection	Steel composition	
Certification	Fabrication	Model	Stiffness	
Chillers	Family member	Mullion	Structural review	
Cladding	Field survey	Operations	Surveillance	
Collapse	Fire alarms	Paint	Survey	
Columns	Fireproofing	Partition layout	Survivor	
Communication systems	Fire spread	Partitions	Tenant list	
Composite truss	Fire testing	Photos	Tenant occupancy	
Computer output	Firetower	Pipes	Testing	
Computer program	Flag Pole	Plumbing	Tie	
Concrete	Flammability	Prestressing	Tolerances	
Connections	Floor	Probability, uncertainty	Transfer Girders	
Construction	Floor load	Quality control	Triad	
Contract	Floor slab	Ramp	Truss	
Core beams	Floor system	Reinforcing (strengthening)	Vestibule	
Core columns	Floor trusses	Renovation	Vibration	
Corrosion	Formwork	Repair	Walls	
Cracking	Foundations	Research & Development	Water supply	
	Fracture		Weather	

SKILLING, HELLE, CHRISTIANSEN, ROBERTSON — Structural & Civil Engineers

PROJECT THE WORLD TRADE CENTER | TITLE CONCRETE MISCELLANEOUS DETAILS - INDEX | DATE 9/ 1/7

REVISIONS

SUPERSEDES 8-JK8-1

8-JK8-	1.1	INDEX
8-JK8-	1.2	INDEX
8-JK8-	1.3	INDEX
8-JK8-	1.4	INDEX
8-JK8-	1.5	INDEX
8-JK8-	1.6	INDEX
8-JK8-	1.7	INDEX
8-JK8-	2	VOID
8-JK8-	3	NOT USED
8-JK8-	4.1	SLOPING SLAB - SECTIONS
8-JK8-	4.2	SLOPING SLAB - SECTIONS
8-JK8-	4.3	SLOPING SLAB - SECTIONS
8-JK8-	4.4	SLOPING SLAB - SECTIONS
8-JK8-	4.5	SLOPING SLAB - SECTIONS
8-JK8-	4.6	SLOPING SLAB - SECTIONS
8-JK8-	4.7	SLOPING SLAB - SECTIONS
8-JK8-	4.8	SLOPING SLAB - SECTIONS
8-JK8-	4.9	SLOPING SLAB - SECTIONS
8-JK8-	4.10	SLOPING SLAB - SECTIONS
8-JK8-	4.11	SLOPING SLAB - SECTIONS
8-JK8-	4.12	SLOPING SLAB - SECTIONS
8-JK8-	4.13	SLOPING SLAB - SECTIONS
8-JK8-	5.1	PERIMETER SECTIONS - ELEVATION 310
8-JK8-	5.2	PERIMETER SECTIONS - ELEVATION 310
8-JK8-	5.3	PERIMETER SECTIONS - ELEVATION 310
8-JK8-	5.4	PERIMETER SECTIONS - ELEVATION 310
8-JK8-	5.5	PERIMETER SECTIONS - ELEVATION 310
8-JK8-	5.6	PERIMETER SECTIONS - ELEVATION 310
8-JK8-	5.7	PERIMETER SECTIONS - ELEVATION 310
8-JK8-	5.8	PERIMETER SECTIONS - ELEVATION 310
8-JK8-	5.9	PERIMETER SECTIONS - ELEVATION 310
8-JK8-	5.10	PERIMETER SECTIONS - ELEVATION 310
8-JK8-	5.11	PERIMETER SECTIONS - ELEVATION 310
8-JK8-	5.12	PERIMETER SECTIONS - ELEVATION 310
8-JK8-	5.13	PERIMETER SECTIONS - ELEVATION 310
8-JK8-	5.14	PERIMETER SECTIONS - ELEVATION 310
8-JK8-	5.15	PERIMETER SECTIONS - ELEVATION 310
8-JK8-	5.16	PERIMETER SECTIONS - ELEVATION 310
8-JK8-	5.17	PERIMETER SECTIONS - ELEVATION 310
8-JK8-	5.18	PERIMETER SECTIONS - ELEVATION 310
8-JK8-	6	VOID
8-JK8-	7.1	EXISTING GRILLAGE OVER TOP OF SLURRY WALL
8-JK8-	7.2	PERIMETER WALL DETAIL
8-JK8-	7.3	COLUMN FOOTING OVER TOP OF SLURRY WALL
8-JK8-	8	NOT USED

SKILLING, HELLE, CHRISTIANSEN, ROBERTSON — Structural & Civil Engineers

PROJECT	TITLE	DATE
THE WORLD TRADE CENTER	CONCRETE MISCELLANEOUS DETAILS - INDEX	9/ 1 70

REVISIONS

8-JK8- 9.1 ELEVATION 253 - SECTIONS
8-JK8- 9.2 ELEVATION 253 - SECTIONS
8-JK8- 9.3 ELEVATION 253 - SECTIONS
8-JK8- 9.4 ELEVATION 253 - SECTIONS
8-JK8- 10.1 REFRIGERATION MACHINE BASE - ELEVATION 257
8-JK8- 10.2 REFRIGERATION MACHINE BASE - ELEVATION 257
8-JK8- 10.3 REFRIGERATION MACHINE BASE - ELEVATION 257
8-JK8- 10.4 REFRIGERATION MACHINE BASE - ELEVATION 257
8-JK8- 11 NOT USED
8-JK8- 12.1 CABLE VAULTS
8-JK8- 12.2 CABLE VAULTS
8-JK8- 12.3 CABLE VAULTS
8-JK8- 12.4 CABLE VAULTS
8-JK8- 12.5 CABLE VAULTS
8-JK8- 12.6 CABLE VAULTS
8-JK8- 12.7 CABLE VAULTS
8-JK8- 12.8 CABLE VAULTS
8-JK8- 12.9 CABLE VAULTS
8-JK8- 12.10 CABLE VAULTS
8-JK8- 13.1 SECTIONS
8-JK8- 13.2 SECTIONS
8-JK8- 13.3 SECTIONS
8-JK8- 13.4 SECTIONS
8-JK8- 13.5 SECTIONS
8-JK8- 13.6 SECTIONS
8-JK8- 14 VOID
8-JK8- 15.1 SPLICE CHAMBER & UTILITY RACK
8-JK8- 15.2 SPLICE CHAMBER & UTILITY RACK
8-JK8- 15.3 SPLICE CHAMBER & UTILITY RACK
8-JK8- 15.4 SPLICE CHAMBER & UTILITY RACK
8-JK8- 15.5 SPLICE CHAMBER & UTILITY RACK
8-JK8- 15.6 SPLICE CHAMBER & UTILITY RACK
8-JK8- 16 VOID
8-JK8- 17.1 STAIR PASSAGE - SECTIONS
8-JK8- 17.2 STAIR PASSAGE - SECTIONS
8-JK8- 17.3 STAIR PASSAGE - SECTIONS
8-JK8- 17.4 STAIR PASSAGE - SECTIONS
8-JK8- 18 NOT USED
8-JK8- 19 EXISTING TELEPHONE MANHOLE - SECTIONS
8-JK8- 20.1 TEMPORARY SHORING
8-JK8- 20.2 TEMPORARY SHORING
8-JK8- 20.3 TEMPORARY SHORING
8-JK8- 20.4 TEMPORARY SHORING
8-JK8- 20.5 TEMPORARY SHORING
8-JK8- 20.6 TEMPORARY SHORING
8-JK8- 20.7 TEMPORARY SHORING

1068-L

REVISIONS

SKILLING, HELLE, CHRISTIANSEN, ROBERTSON Structural & Civil Engineers

PROJECT	TITLE	DATE
THE WORLD TRADE CENTER	CONCRETE MISCELLANEOUS DETAILS - INDEX	9/ 1/70

8-JK8- 21.1 VOID
8-JK8- 21.2 SOUTH PROJECTION - SECTIONS
8-JK8- 21.3 SOUTH PROJECTION - SECTIONS
8-JK8- 21.4 SOUTH PROJECTION - SECTIONS
8-JK8- 21.5 SOUTH PROJECTION - SECTIONS
8-JK8- 21.6 SOUTH PROJECTION - SECTIONS
8-JK8- 21.7 SOUTH PROJECTION - SECTIONS
8-JK8- 21.8 SOUTH PROJECTION - SECTIONS
8-JK8- 21.9 SOUTH PROJECTION - SECTIONS
8-JK8- 21.10 SOUTH PROJECTION - SECTIONS
8-JK8- 21.11 SOUTH PROJECTION - SECTIONS
8-JK8- 21.12 SOUTH PROJECTION - SECTIONS
8-JK8- 21.13 SOUTH PROJECTION - SECTIONS
8-JK8- 21.14 SOUTH PROJECTION - SECTIONS
8-JK8- 21.15 SOUTH PROJECTION - SECTIONS
8-JK8- 21.16 SOUTH PROJECTION - SECTIONS
8-JK8- 22.1 NORTH PROJECTION - SECTIONS
8-JK8- 22.2 NORTH PROJECTION - SECTIONS
8-JK8- 22.3 NORTH PROJECTION - SECTIONS
8-JK8- 22.4 NORTH PROJECTION - SECTIONS
8-JK8- 22.5 NORTH PROJECTION - SECTIONS
8-JK8- 22.6 NORTH PROJECTION - SECTIONS
8-JK8- 22.7 NORTH PROJECTION - SECTIONS
8-JK8- 22.8 NORTH PROJECTION - SECTIONS
8-JK8- 22.9 NORTH PROJECTION - SECTIONS
8-JK8- 22.10 NORTH PROJECTION - SECTIONS
8-JK8- 22.11 NORTH PROJECTION - SECTIONS
8-JK8- 22.12 NORTH PROJECTION - SECTIONS
8-JK8- 22.13 NORTH PROJECTION - SECTIONS
8-JK8- 22.14 NORTH PROJECTION - SECTIONS
8-JK8- 22.15 NORTH PROJECTION - SECTIONS
8-JK8- 22.16 NORTH PROJECTION - SECTIONS
8-JK8- 22.17 NORTH PROJECTION - SECTIONS
8-JK8- 22.18 NORTH PROJECTION - SECTIONS
8-JK8- 22.19 NORTH PROJECTION - SECTIONS
8-JK8- 23 SECTIONS
8-JK8- 24 SECTIONS
8-JK8- 24.1 SECTIONS
8-JK8- 25 SECTION AT BEAM REQUIRING LATERAL SUPPORT
8-JK8- 26 NOT USED
8-JK8- 27 NOT USED
8-JK8- 28 SECTIONS
8-JK8- 29 LIGHT POLE
8-JK8- 30 NOT USED

SKILLING, HELLE, CHRISTIANSEN, ROBERTSON — Structural & Civil Engineers

PROJECT: THE WORLD TRADE CENTER | TITLE: CONCRETE MISCELLANEOUS DETAILS - INDEX | DATE: 9/ 1/70

REVISIONS

8-JK8- 31 SECTIONS
8-JK8- 32 SECTIONS
8-JK8- 33.1 SECTIONS
8-JK8- 33.2 SECTIONS
8-JK8- 34 SECTIONS
8-JK8- 35 SECTIONS
8-JK8- 35.1 SECTIONS
8-JK8- 36 SECTIONS
8-JK8- 37.1 SECTIONS
8-JK8- 37.2 SECTIONS
8-JK8- 38 SECTIONS
8-JK8- 38.1 SECTIONS
8-JK8- 39.1 ELEVATION 257 - SECTIONS
8-JK8- 39.2 ELEVATION 257 - SECTIONS
8-JK8- 39.3 ELEVATION 257 - SECTIONS
8-JK8- 39.4 ELEVATION 257 - SECTIONS
8-JK8- 39.5 ELEVATION 257 - SECTIONS
8-JK8- 39.6 ELEVATION 257 - SECTIONS
8-JK8- 39.7 ELEVATION 257 - SECTIONS
8-JK8- 39.8 ELEVATION 257 - SECTIONS
8-JK8- 40 NOT USED
8-JK8- 41.1 ELEVATION 310 - SECTIONS
8-JK8- 41.2 ELEVATION 310 - SECTIONS
8-JK8- 41.3 ELEVATION 310 - SECTIONS
8-JK8- 41.4 ELEVATION 310 - SECTIONS
8-JK8- 41.5 ELEVATION 310 - SECTIONS
8-JK8- 41.6 ELEVATION 310 - SECTIONS
8-JK8- 41.7 ELEVATION 310 - SECTIONS
8-JK8- 41.8 ELEVATION 310 - SECTIONS
8-JK8- 41.9 ELEVATION 310 - SECTIONS
8-JK8- 41.10 ELEVATION 310 - SECTIONS
8-JK8- 41.11 ELEVATION 310 - SECTIONS
8-JK8- 41.12 ELEVATION 310 - SECTIONS
8-JK8- 41.13 ELEVATION 310 - SECTIONS
8-JK8- 41.14 ELEVATION 310 - SECTIONS
8-JK8- 41.15 ELEVATION 310 - SECTIONS
8-JK8- 41.16 ELEVATION 310 - SECTIONS
8-JK8- 41.17 ELEVATION 310 - SECTIONS
8-JK8- 41.18 ELEVATION 310 - SECTIONS
8-JK8- 41.19 ELEVATION 310 - SECTIONS
8-JK8- 41.20 ELEVATION 310 - SECTIONS
8-JK8- 42 CONCRETE BEAM - SECTIONS
8-JK8- 43 BEAM REINFORCEMENT & CONSTRUCTION JOINT DETAIL
8-JK8- 44 CATCH BASIN NO.1
8-JK8- 45 CATCH BASIN NO.2
8-JK8- 45.1 CATCH BASIN NO.3
8-JK8- 45.2 CATCH BASIN NO.3
8-JK8- 45.3 CATCH BASIN NO.3

8-JK8- 46.1 ELEVATION 294 - SECTIONS
8-JK8- 46.2 ELEVATION 294 - SECTIONS
8-JK8- 46.3 ELEVATION 294 - SECTIONS
8-JK8- 46.4 ELEVATION 294 - SECTIONS
8-JK8- 46.5 ELEVATION 294 - SECTIONS
8-JK8- 46.6 ELEVATION 294 - SECTIONS
8-JK8- 46.7 ELEVATION 294 - SECTIONS
8-JK8- 46.8 ELEVATION 294 - SECTIONS
8-JK8- 46.9 ELEVATION 294 - SECTIONS
8-JK8- 46.10 ELEVATION 294 - SECTIONS
8-JK8- 46.11 ELEVATION 294 - SECTIONS
8-JK8- 46.12 ELEVATION 294 - SECTIONS
8-JK8- 46.13 ELEVATION 294 - SECTIONS
8-JK8- 46.14 ELEVATION 294 - SECTIONS
8-JK8- 47.1 ELEVATION 284 - SECTIONS
8-JK8- 47.2 ELEVATION 284 - SECTIONS
8-JK8- 47.3 ELEVATION 284 - SECTIONS
8-JK8- 47.4 ELEVATION 284 - SECTIONS
8-JK8- 47.5 ELEVATION 284 - SECTIONS
8-JK8- 47.6 ELEVATION 284 - SECTIONS
8-JK8- 47.7 ELEVATION 284 - SECTIONS
8-JK8- 47.8 ELEVATION 284 - SECTIONS
8-JK8- 47.9 ELEVATION 284 - SECTIONS
8-JK8- 47.10 ELEVATION 284 - SECTIONS
8-JK8- 47.11 ELEVATION 284 - SECTIONS
8-JK8- 47.12 ELEVATION 284 - SECTIONS
8-JK8- 47.13 ELEVATION 284 - SECTIONS
8-JK8- 47.14 ELEVATION 284 - SECTIONS
8-JK8- 47.15 ELEVATION 284 - SECTIONS
8-JK8- 47.16 ELEVATION 284 - SECTIONS
8-JK8- 48.1 SECTIONS
8-JK8- 48.2 SECTIONS
8-JK8- 48.3 SECTIONS
8-JK8- 48.4 SECTIONS
8-JK8- 48.5 SECTIONS
8-JK8- 48.6 SECTIONS
8-JK8- 48.7 SECTIONS
8-JK8- 48.8 SECTIONS
8-JK8- 48.9 SECTIONS
8-JK8- 48.10 SECTIONS
8-JK8- 48.11 SECTIONS
8-JK8- 48.12 SECTIONS
8-JK8- 48.13 SECTIONS
8-JK8- 48.14 SECTIONS
8-JK8- 48.15 SECTIONS
8-JK8- 48.16 SECTIONS
8-JK8- 49 NOT USED

SKILLING, HELLE, CHRISTIANSEN, ROBERTSON — Structural & Civil Engineers

PROJECT	TITLE	DATE
THE WORLD TRADE CENTER	CONCRETE MISCELLANEOUS DETAILS - INDEX	9/ 1/70

REVISIONS

8-JK8- 50.1 ELEVATION 290 - SECTIONS
8-JK8- 50.2 ELEVATION 290 - SECTIONS
8-JK8- 50.3 ELEVATION 290 - SECTIONS
8-JK8- 50.4 ELEVATION 290 - SECTIONS
8-JK8- 50.5 ELEVATION 290 - SECTIONS
8-JK8- 50.6 ELEVATION 290 - SECTIONS
8-JK8- 50.7 ELEVATION 290 - SECTIONS
8-JK8- 50.8 ELEVATION 290 - SECTIONS
8-JK8- 50.9 ELEVATION 290 - SECTIONS
8-JK8- 50.10 ELEVATION 290 - SECTIONS
8-JK8- 50.11 ELEVATION 290 - SECTIONS
8-JK8- 50.12 ELEVATION 290 - SECTIONS
8-JK8- 50.13 ELEVATION 290 - SECTIONS
8-JK8- 50.14 ELEVATION 290 - SECTIONS
8-JK8- 50.15 ELEVATION 290 - SECTIONS
8-JK8- 51.1 ELEVATION 274 - SECTIONS
8-JK8- 51.2 ELEVATION 274 - SECTIONS
8-JK8- 51.3 ELEVATION 274 - SECTIONS
8-JK8- 51.4 ELEVATION 274 - SECTIONS
8-JK8- 51.5 ELEVATION 274 - SECTIONS
8-JK8- 51.6 ELEVATION 274 - SECTIONS
8-JK8- 51.7 ELEVATION 274 - SECTIONS
8-JK8- 51.8 ELEVATION 274 - SECTIONS
8-JK8- 51.9 ELEVATION 274 - SECTIONS
8-JK8- 51.10 ELEVATION 274 - SECTIONS
8-JK8- 51.11 ELEVATION 274 - SECTIONS
8-JK8- 51.12 ELEVATION 274 - SECTIONS
8-JK8- 51.13 ELEVATION 274 - SECTIONS
8-JK8- 52.1 PUMP PLATFORM ANCHOR BOLT DETAILS
8-JK8- 53 NOT USED
8-JK8- 54.1 ELEVATION 310 - SECTIONS (CONTINUED)
8-JK8- 54.2 ELEVATION 310 - SECTIONS
8-JK8- 54.3 ELEVATION 310 - SECTIONS
8-JK8- 54.4 ELEVATION 310 - SECTIONS
8-JK8- 54.5 ELEVATION 310 - SECTIONS
8-JK8- 54.6 ELEVATION 310 - SECTIONS
8-JK8- 54.7 ELEVATION 310 - SECTIONS
8-JK8- 54.8 ELEVATION 310 - SECTIONS
8-JK8- 54.9 ELEVATION 310 - SECTIONS
8-JK8- 54.10 ELEVATION 310 - SECTIONS
8-JK8- 54.11 ELEVATION 310 - SECTIONS
8-JK8- 54.12 ELEVATION 310 - SECTIONS
8-JK8- 54.13 ELEVATION 310 - SECTIONS
8-JK8- 54.14 ELEVATION 310 - SECTIONS
8-JK8- 55 NOT USED

SKILLING, HELLE, CHRISTIANSEN, ROBERTSON — Structural & Civil Engineers

PROJECT THE WORLD TRADE CENTER | TITLE SECTION AT SLOPE SLAB | DATE 7-1-69

REVISIONS

7-18-69

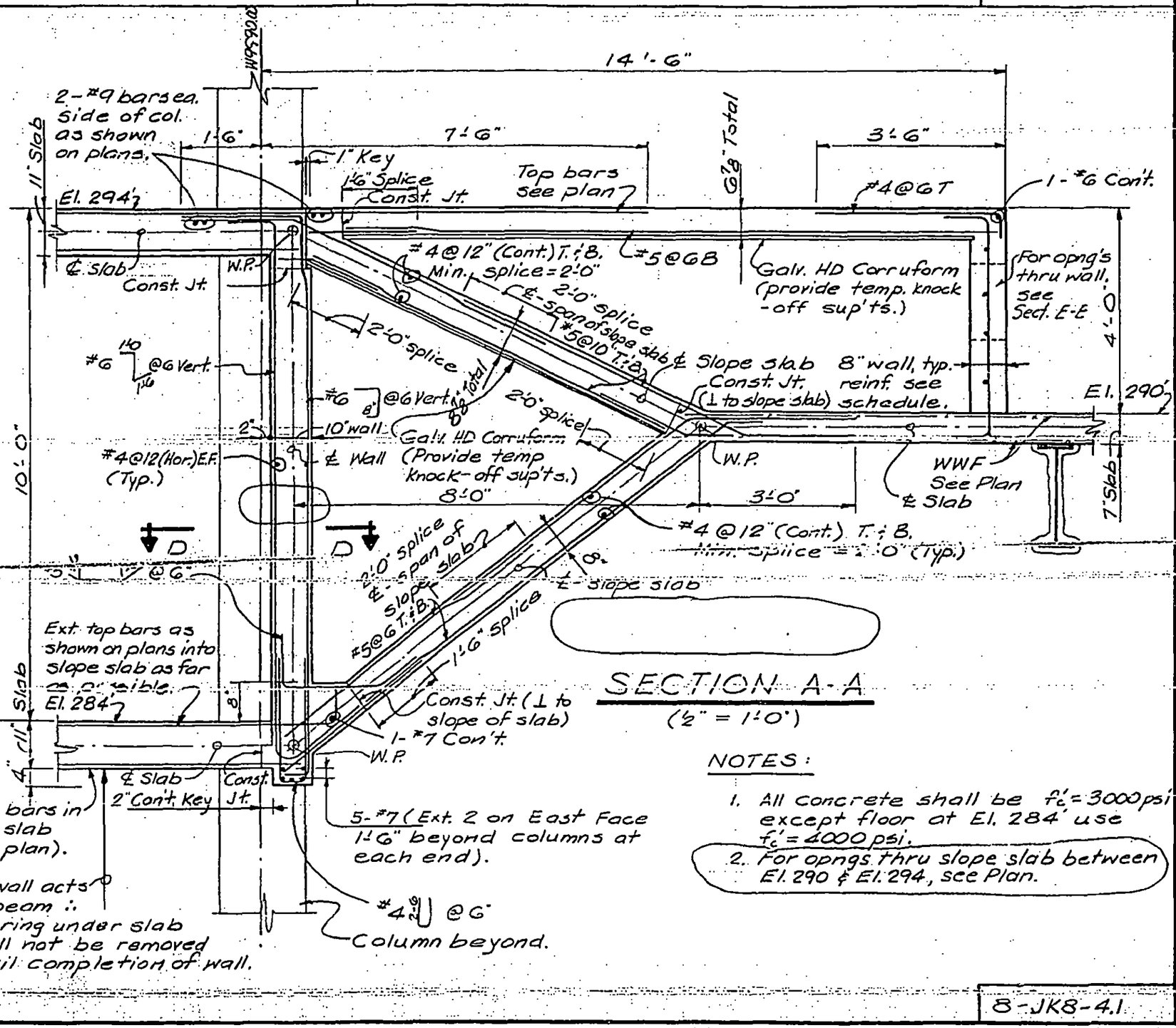

SECTION A-A

(½" = 1'-0")

NOTES:

1. All concrete shall be f'_c = 3000 psi except floor at El. 284' use f'_c = 4000 psi.
2. For opngs thru slope slab between El. 290 & El. 294, see Plan.

LICENSED PROFESSIONAL ENGINEER — LESLIE E. ROBERTSON — No. 34360 — UNIVERSITY OF THE STATE OF NEW YORK

DESIGNED

DRAWN G.S.

E.L.

8-JK8-4.1

SKILLING, HELLE, CHRISTIANSEN, ROBERTSON — Structural & Civil Engineers

PROJECT THE WORLD TRADE CENTER | TITLE SECTIONS AT SLOPE SLAB | DATE 5-1-68

REVISIONS

7-1-69 GEN. REV.

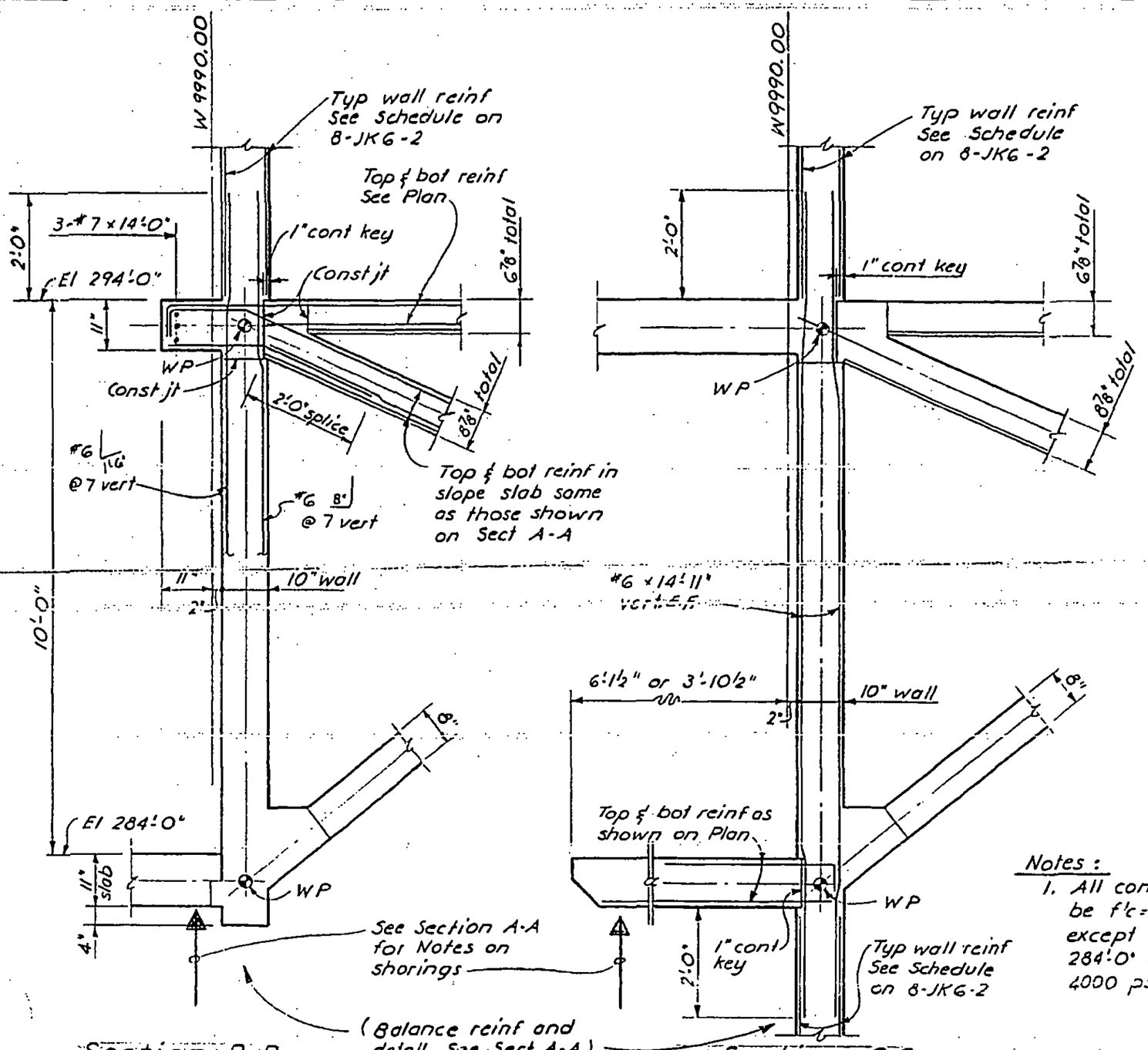

Notes :

1. All concrete shall be f'c = 3000 psi except floor at El 284'-0" use f'c = 4000 psi.

DESIGNED

DRAWN F. Smith

CHECKED E.L.

8-JK8-4.2

SKILLING, HELLE, CHRISTIANSEN, ROBERTSON — Structural & Civil Engineers

PROJECT: THE WORLD TRADE CENTER | TITLE: SECTION AT SLOPE SLAB | DATE: 5-1-68

REVISIONS

7-1-69 GEN. REV.

7-23-69

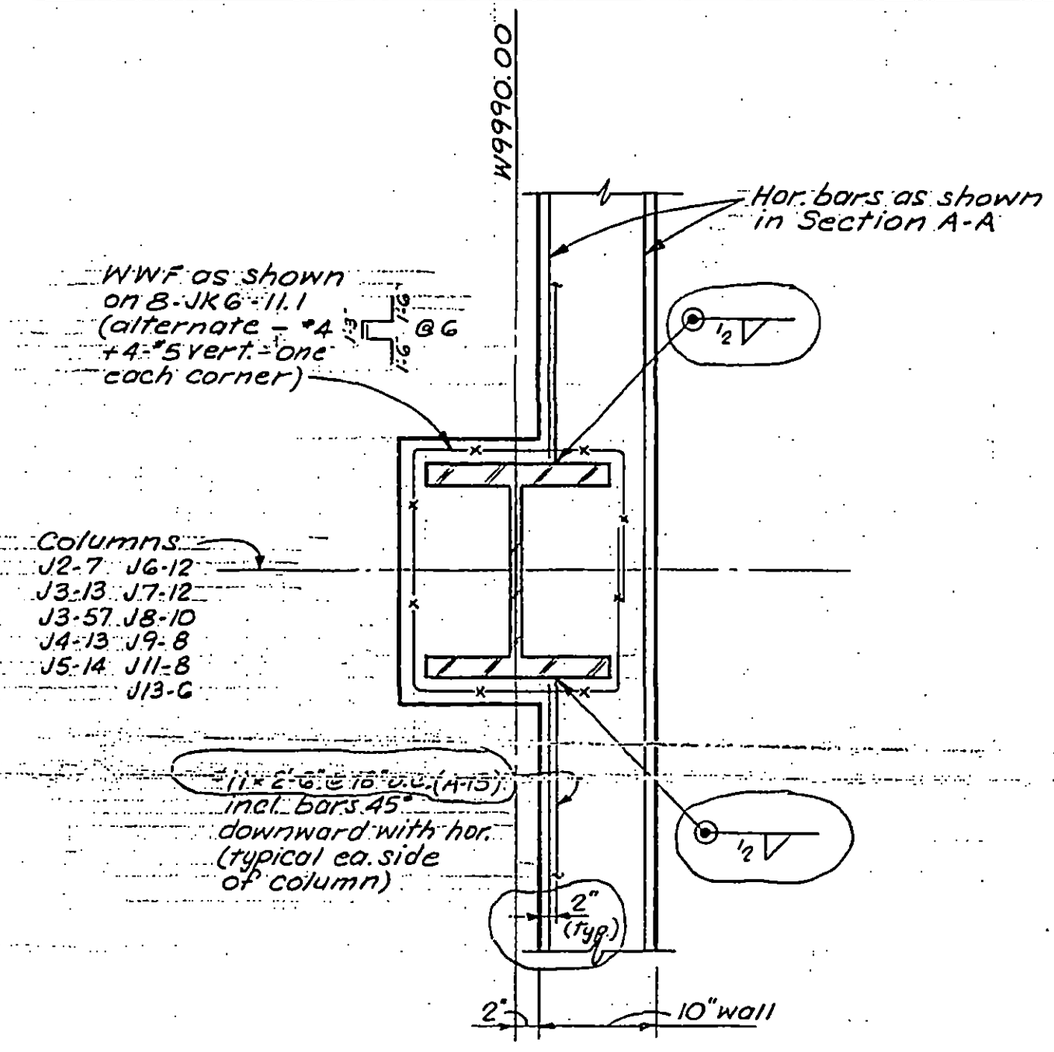

Section D-D

(1" = 1'-0")

LICENSED PROFESSIONAL ENGINEER — LESLIE E. ROBERTSON — No. 34360 — UNIVERSITY OF THE STATE OF NEW YORK

DESIGNED

DRAWN S.C.

REVIEWED E.L.

8-JK8-4.3

SKILLING, HELLE, CHRISTIANSEN, ROBERTSON — Structural & Civil Engineers

PROJECT: THE WORLD TRADE CENTER | TITLE: DETAIL OF OPN'G. THRU 8" WALL UNDER LOADING DOCK | DATE: 7-1-69

REVISIONS

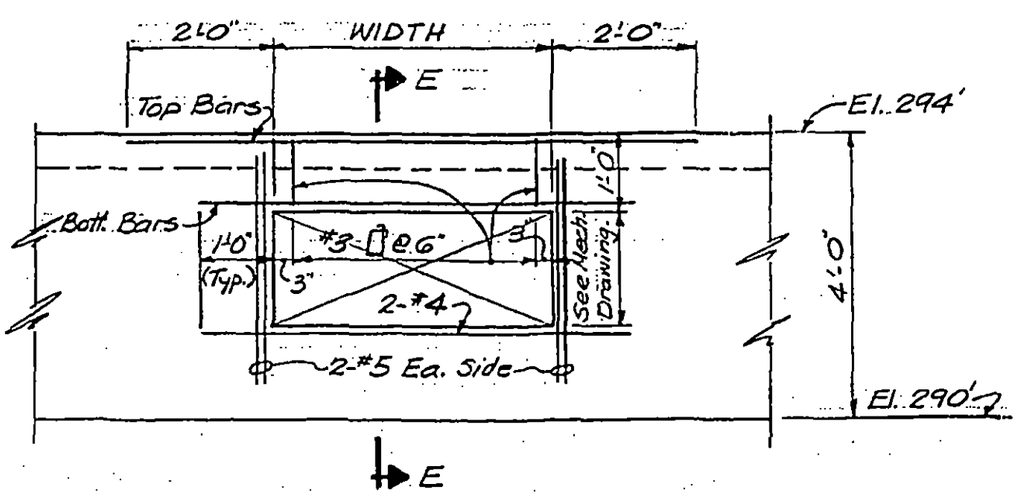

Elevation
(1/2" = 1'-0")

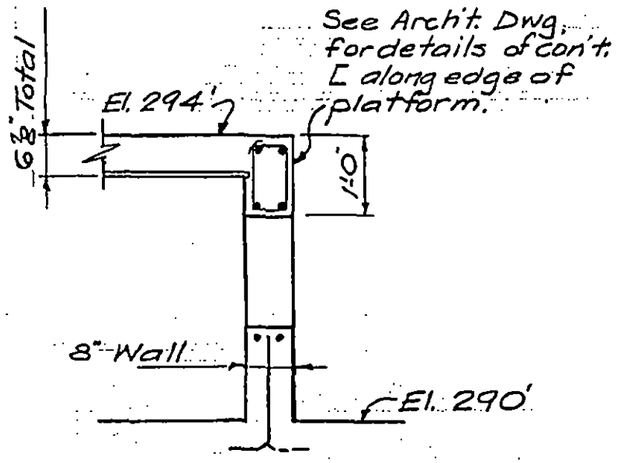

Section E-E
(1/2" = 1'-0")

Width of Opn'g.	Top & Bott. Bars
4'-0" or less	2-#4
4'-1" to 6'-0"	2-#5

NOTES:
1. For exact size and location of opn'gs, see Mech. Dwgs.

LICENSED PROFESSIONAL ENGINEER — LESLIE E. ROBERTSON — No. 34360 — UNIVERSITY OF THE STATE OF NEW YORK

DESIGNED

DRAWN: G. Stanton

REVIEWED: E.L.

8-JK8-4.4

SKILLING, HELLE, CHRISTIANSEN, ROBERTSON — Structural & Civil Engineers

PROJECT: THE WORLD TRADE CENTER | TITLE: SECTION AT SLOPE SLAB | DATE: 7-18-69

REVISIONS

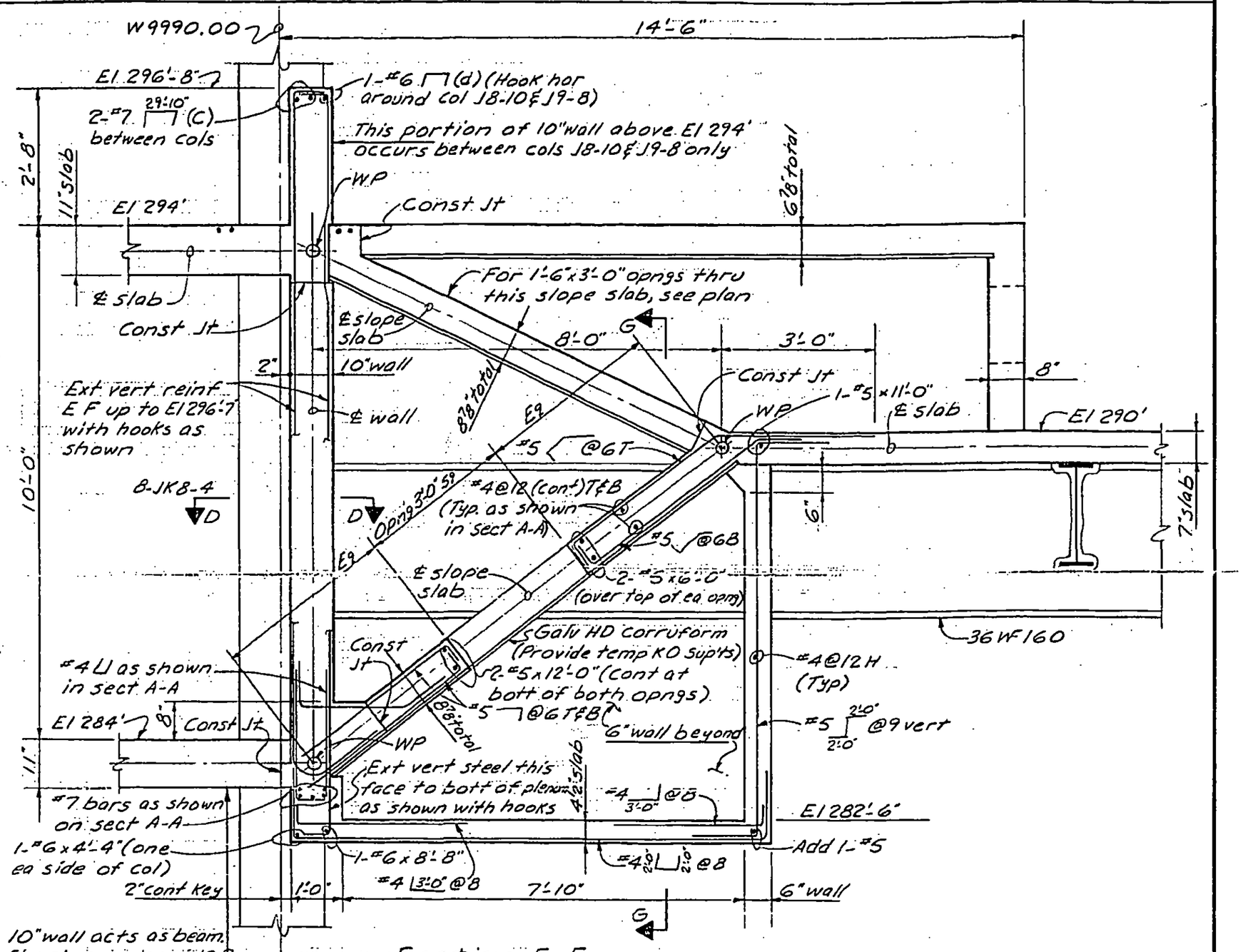

Section F-F
(¼"=1'-0")
(For balance reinf & details, see sect A-A)

8-JK8-4.5

LICENSED PROFESSIONAL ENGINEER — LESLIE E. ROBERTSON — No. 34260 — UNIVERSITY OF THE STATE OF NEW YORK

DESIGNED

DRAWN: A.L. FRANQUI

REVIEWED: E.L.

SKILLING - HELLE - CHRISTIANSEN - ROBERTSON — Structural & Civil Engineers

PROJECT: WORLD TRADE CENTER | TITLE: SECTION AT SLOPE SLAB | DATE: 7-18-69

REVISIONS

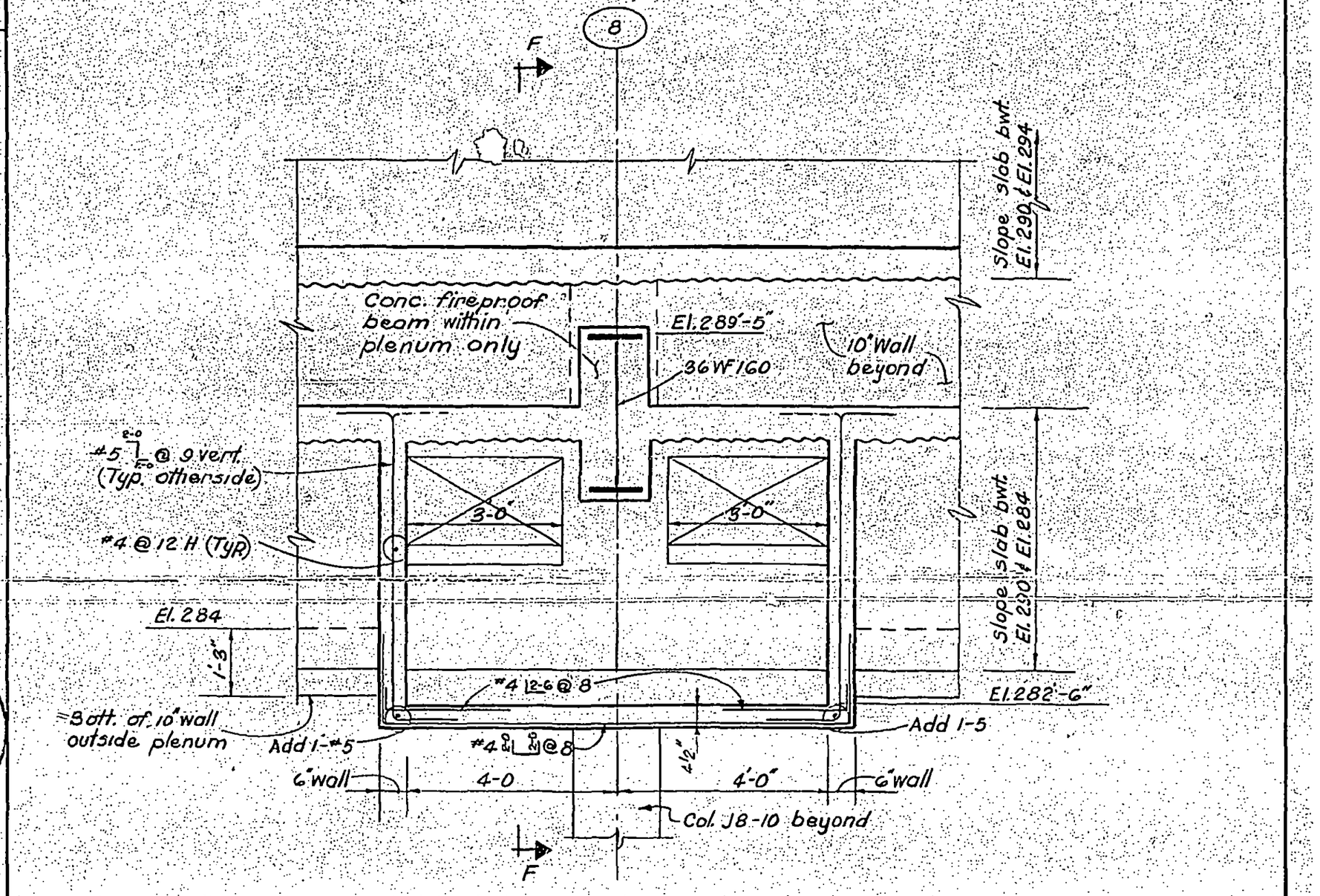

Section G-G
(12"=1'-0")

LICENSED PROFESSIONAL ENGINEER — LESLIE E. ROBERTSON — No. 34360 — UNIVERSITY OF THE STATE OF NEW YORK

DRAWN D.U.

REVIEWED E.L.

8-JK-8-4.6

SKILLING, HELLE, CHRISTIANSEN, ROBERTSON — Structural & Civil Engineers

PROJECT: THE WORLD TRADE CENTER | TITLE: SECTION AT SLOPE SLAB | DATE: 7-18-69

REVISIONS

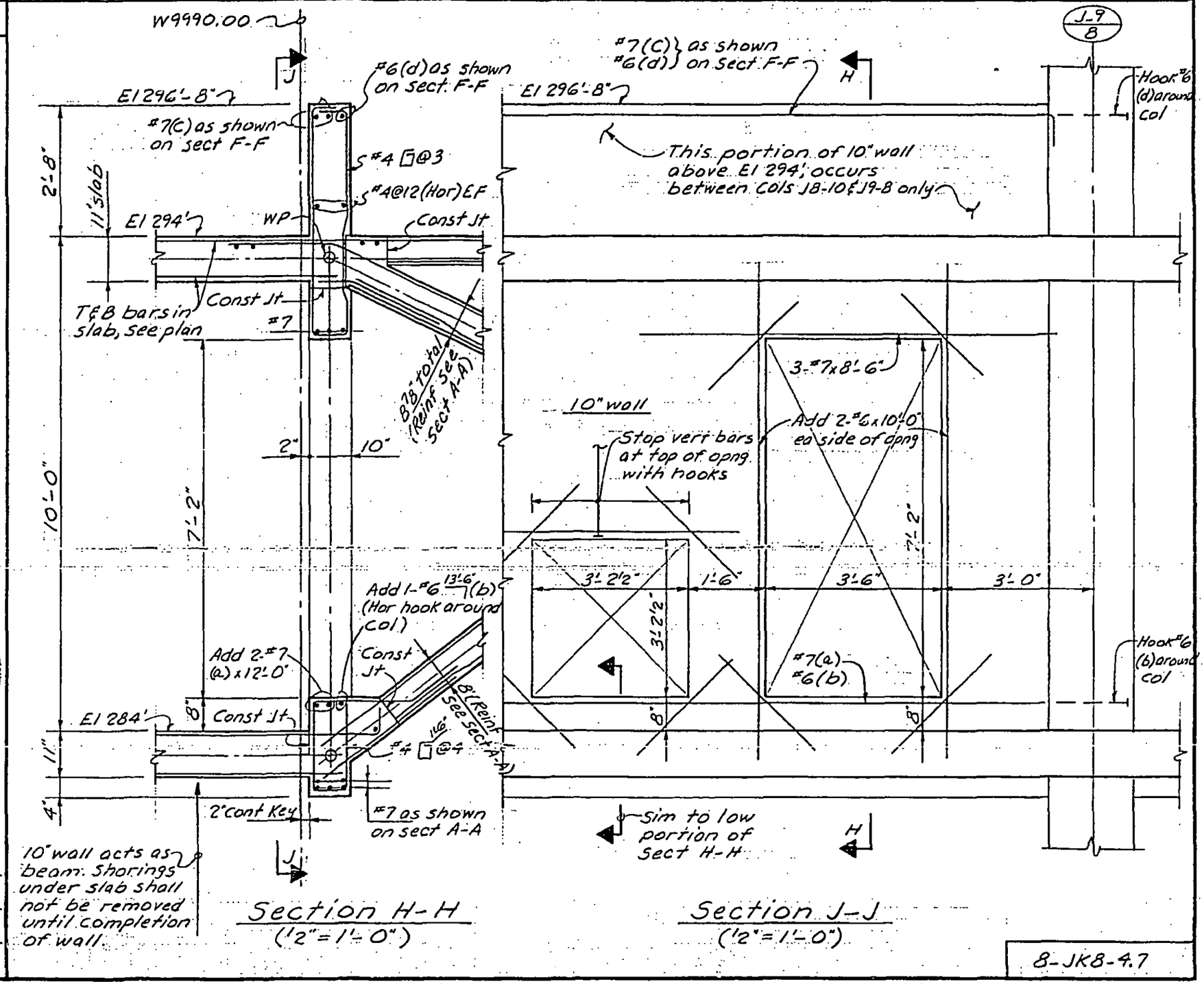

LICENSED PROFESSIONAL ENGINEER — LESLIE E. ROBERTSON — No. 34360 — UNIVERSITY OF THE STATE OF NEW YORK

DESIGNED

DRAWN: A.L. FRANQUI

REVIEWED: E.L.

8-JK8-4.7

SKILLING, HELLE, CHRISTIANSEN, ROBERTSON — Structural & Civil Engineers

PROJECT: THE WORLD TRADE CENTER | TITLE: SECTION AT SLOPE SLAB | DATE: 7-18-69

REVISIONS
8-8-69
9-26-69

LICENSED PROFESSIONAL ENGINEER
LESLIE E. ROBERTSON
No. 34360
UNIVERSITY OF THE STATE OF NEW YORK

DESIGNED

DRAWN A.L. FRANQUI

REVIEWED E.L.

8-JK8-4.8

SKILLING, HELLE, CHRISTIANSEN, ROBERTSON — Structural & Civil Engineers

PROJECT: THE WORLD TRADE CENTER | TITLE: SECTION AT SLOPE SLAB | DATE: 7-18-69

REVISIONS

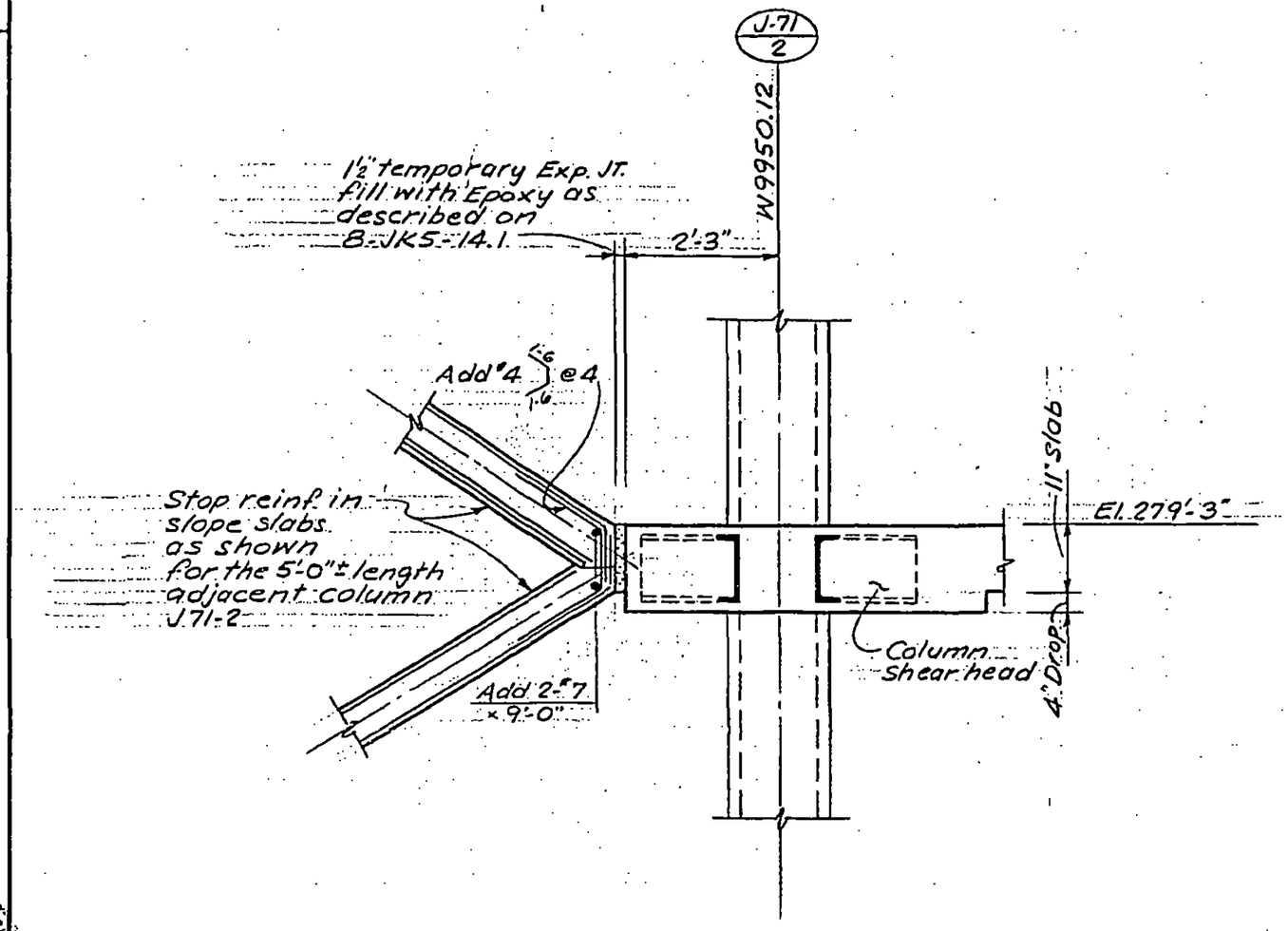

Section L-L

(½" = 1'-0")

LICENSED PROFESSIONAL ENGINEER — LESLIE E. ROBERTSON — No. 34360 — UNIVERSITY OF THE STATE OF NEW YORK

DESIGNED

DRAWN: S.C.

REVIEWED: E.L.

8-JKB-4.9

SKILLING, HELLE, CHRISTIANSEN, ROBERTSON — Structural & Civil Engineers

PROJECT: THE WORLD TRADE CENTER | TITLE: SECTION AT SLOPE SLAB | DATE: 7-23-69

REVISIONS

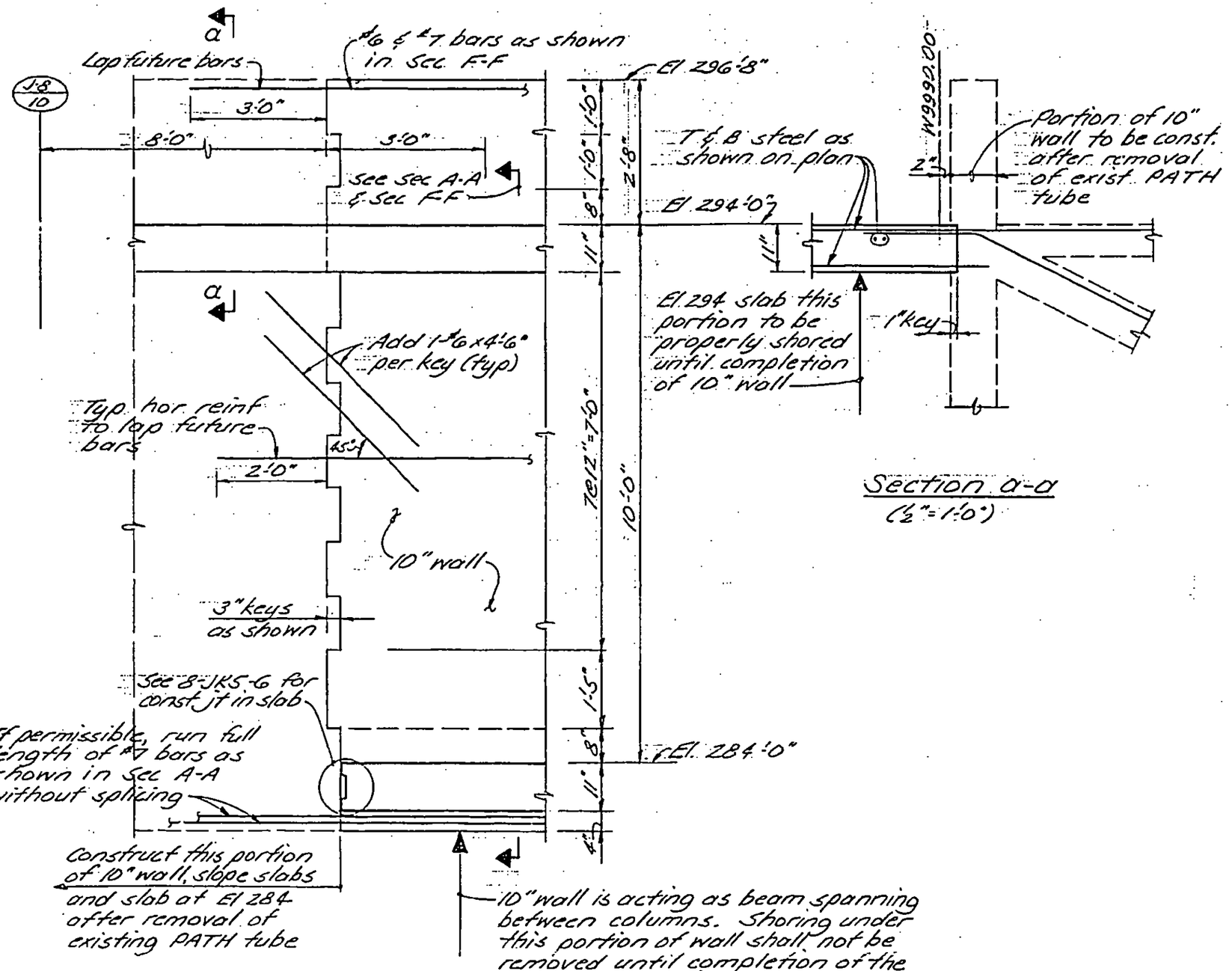

Section a-a
(½"=1'-0")

DETAIL - 1
(LOOKING EAST)
½"=1'-0"

DESIGNED

DRAWN J. Adams

REVIEWED E.L.

8-JK8-4.10

SKILLING, HELLE, CHRISTIANSEN, ROBERTSON — Structural & Civil Engineers

PROJECT: THE WORLD TRADE CENTER | TITLE: SECTION AT SLOPE SLAB | DATE: 7-23-69

REVISIONS

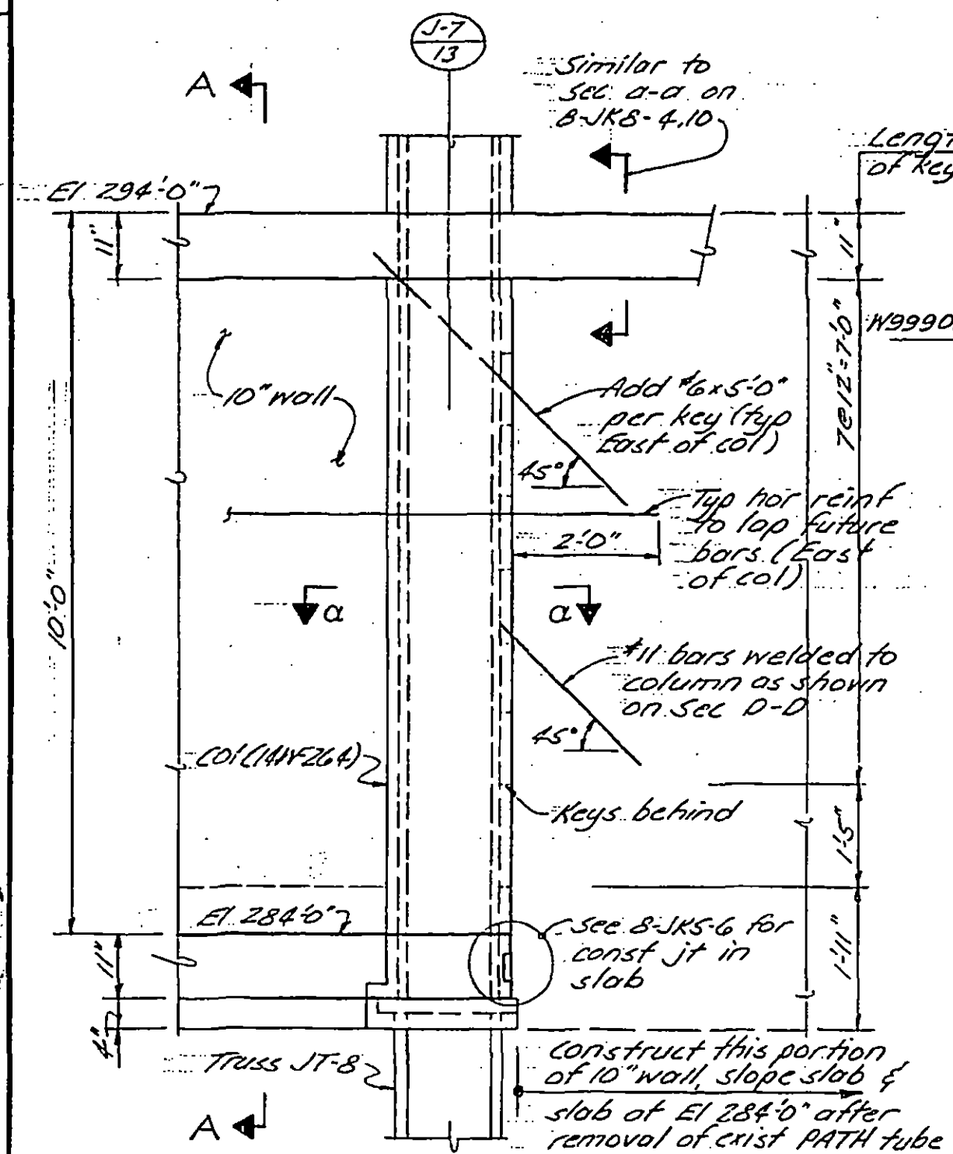

DETAIL - 2
(Looking East)
½"=1'-0"

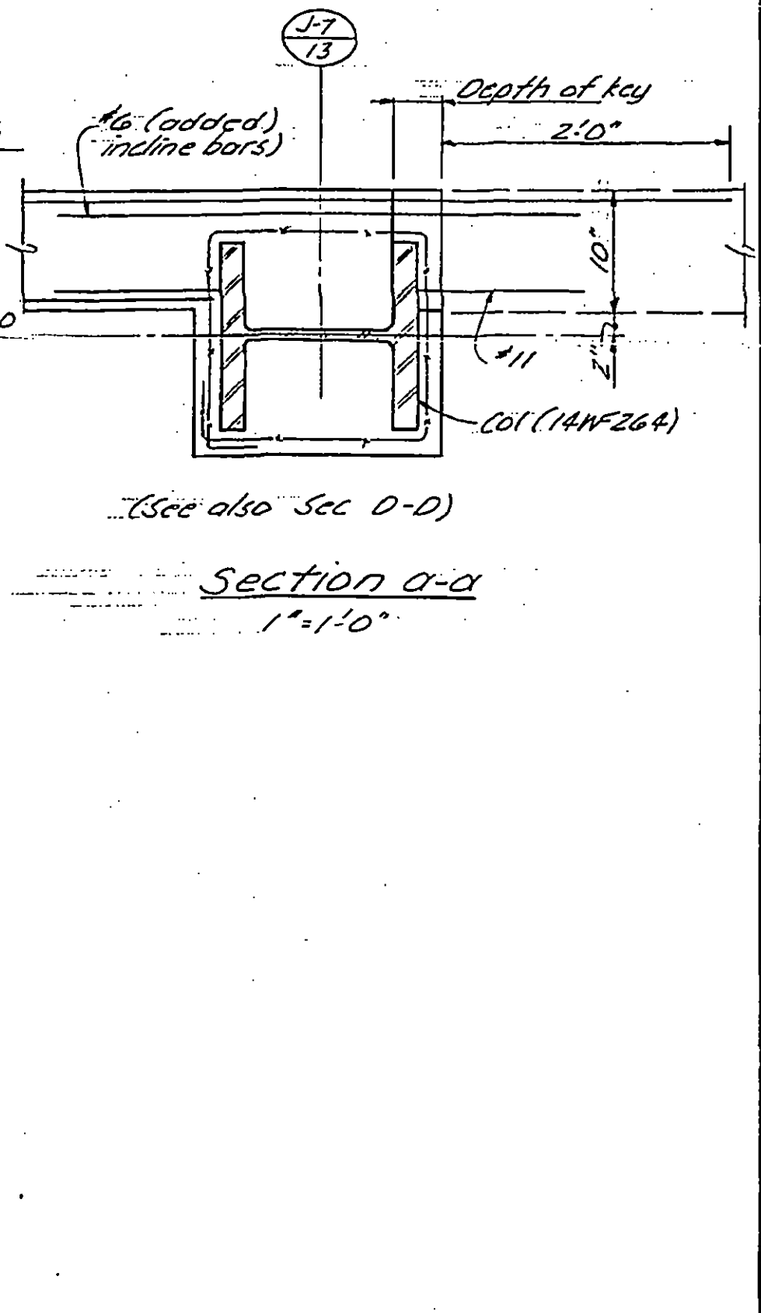

(See also Sec D-D)

Section a-a
1"=1'-0"

DESIGNED

DRAWN J. Adams

REVIEWED E.L.

B-JKB-4.11

SKILLING, HELLE, CHRISTIANSEN, ROBERTSON — Structural & Civil Engineers

PROJECT: THE WORLD TRADE CENTER | TITLE: SECTION AT SLOPE SLAB | DATE: 7-23-69

REVISIONS

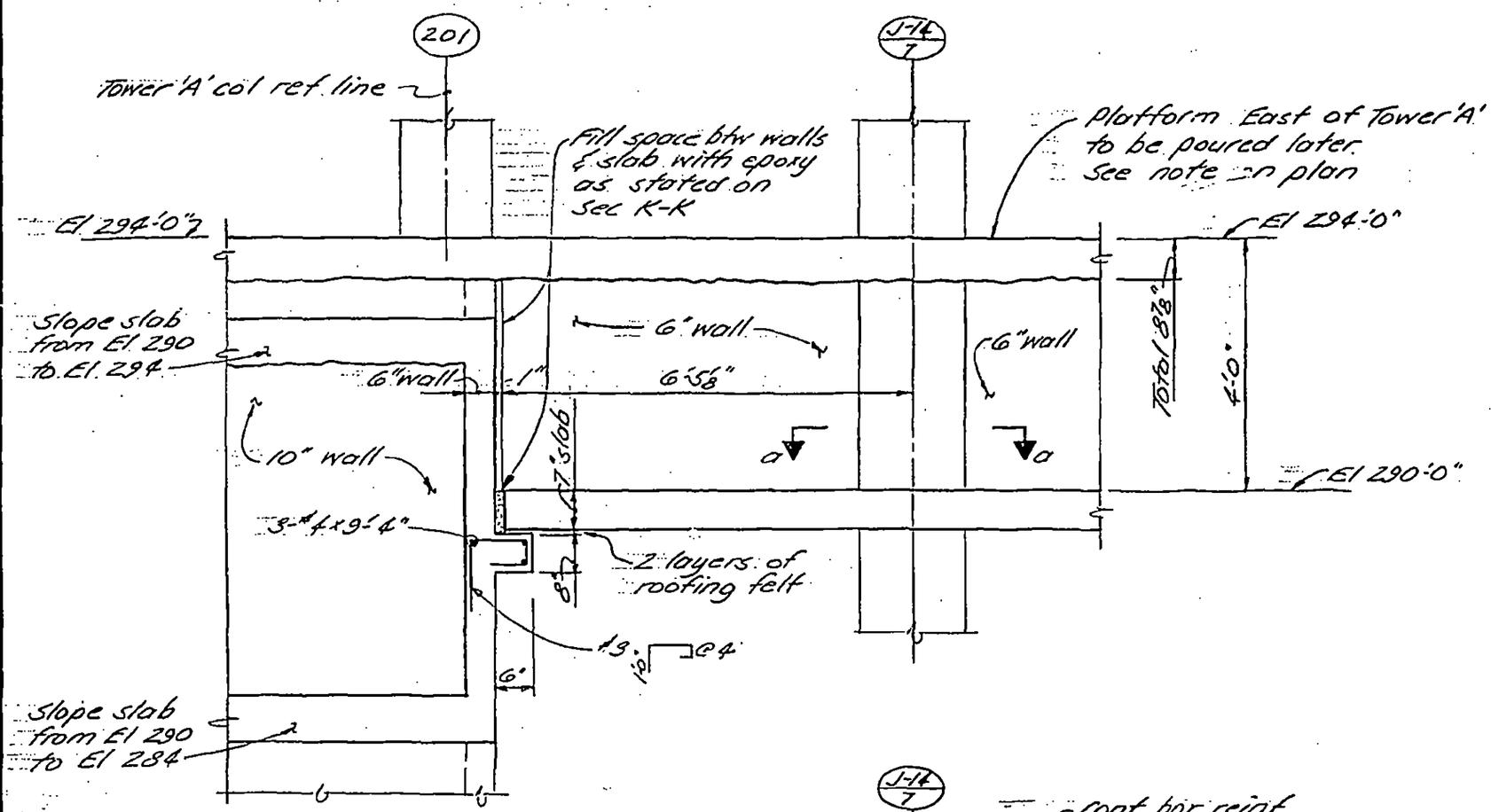

Section M-M
½" = 1'-0"

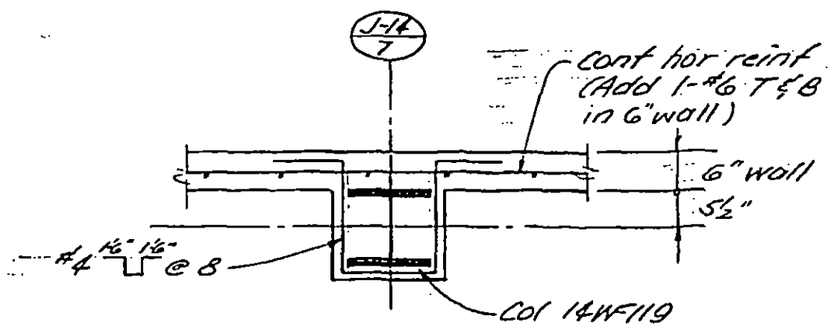

Section a-a

DESIGNED

DRAWN J. Adams

REVIEWED E.L.

8-JKB-4.12

SKILLING, HELLE, CHRISTIANSEN, ROBERTSON — Structural & Civil Engineers

PROJECT THE WORLD TRADE CENTER | TITLE SECTION AT SLOPE SLAB | DATE 11-25-69

REVISIONS

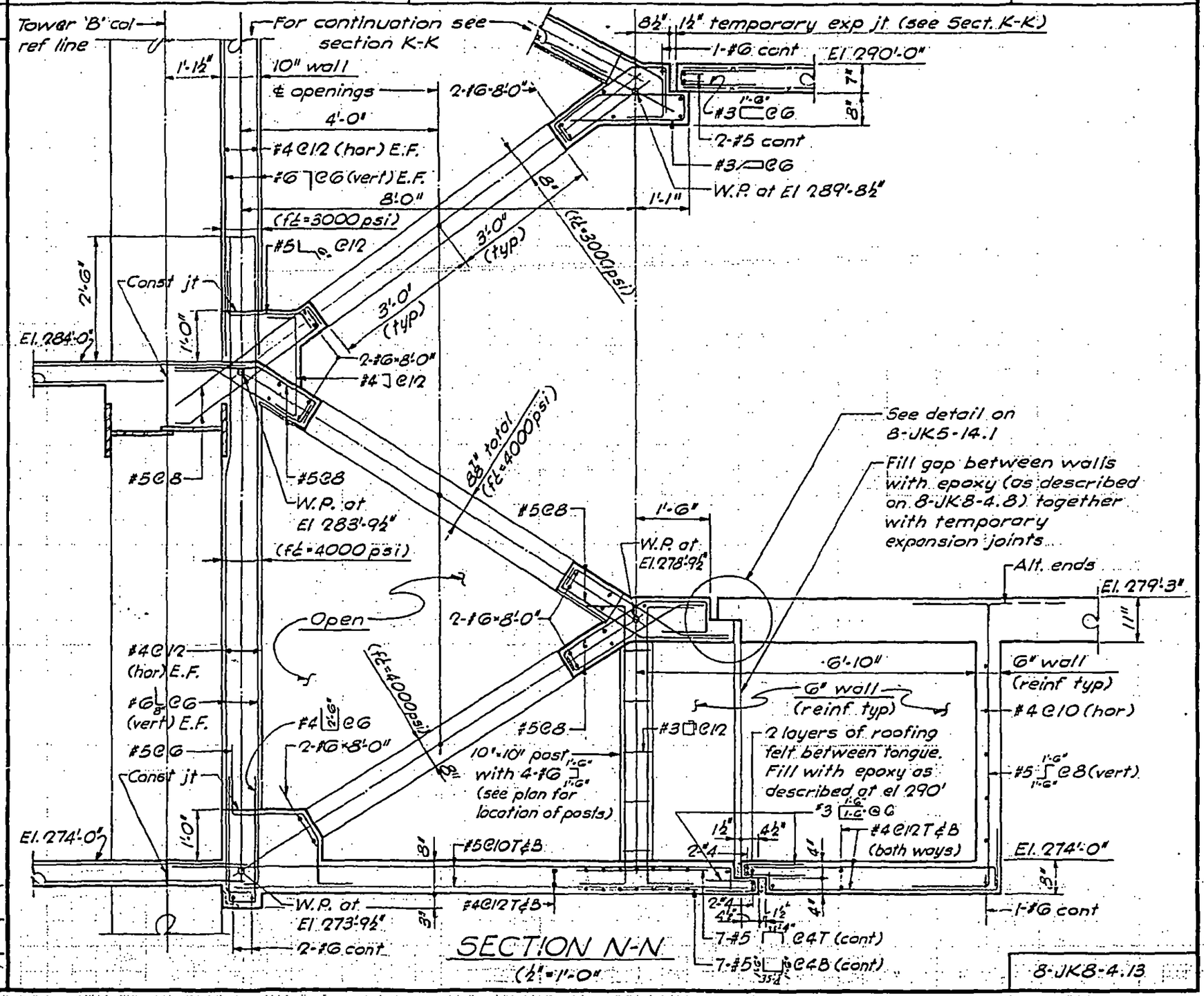

SECTION N-N
(½"=1'-0")

8-JK8-4.13

LICENSED PROFESSIONAL ENGINEER — LESLIE E. ROBERTSON — No. 34360 — UNIVERSITY OF THE STATE OF NEW YORK

DESIGNED

DRAWN G.K.

REVIEWED E.L.

SKILLING, HELLE, CHRISTIANSEN, ROBERTSON — Structural & Civil Engineers

PROJECT THE WORLD TRADE CENTER | TITLE PERIMETER SECTIONS AT EL. 310 | DATE 5-1-68

REVISIONS

5-12-69 GEN. REV.

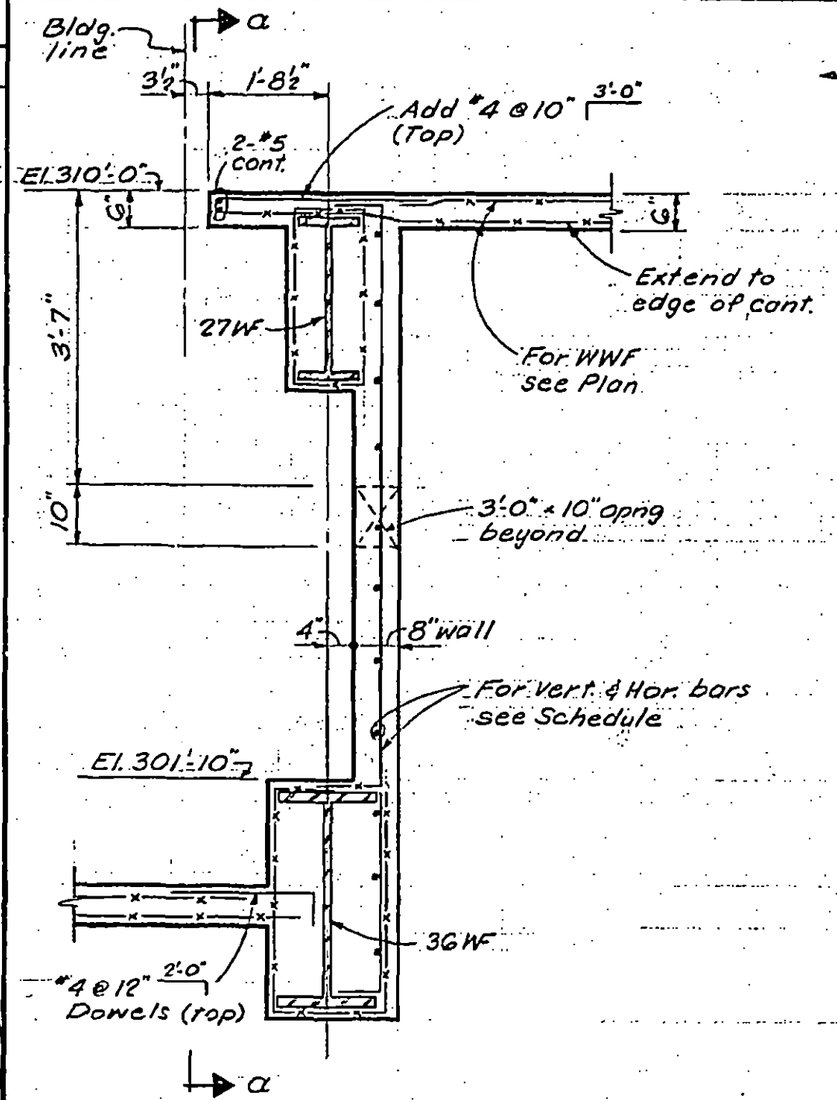

Section A-A

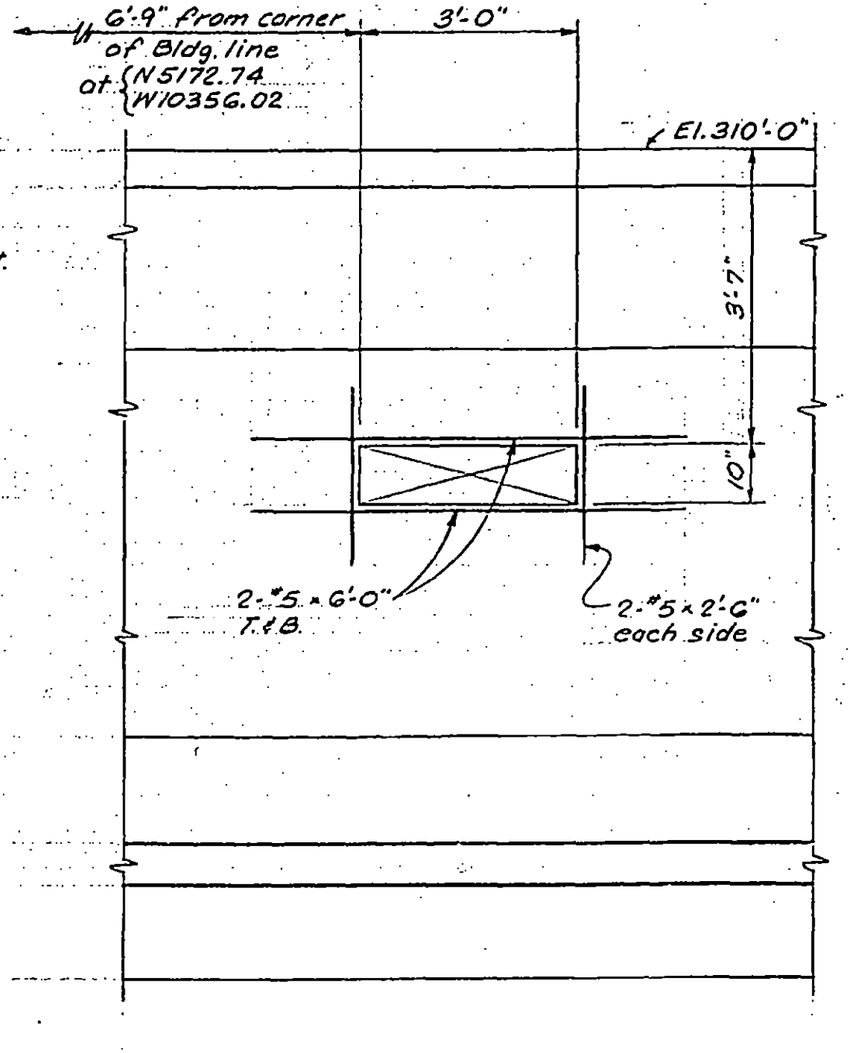

Section a-a

LICENSED PROFESSIONAL ENGINEER — LESLIE E. ROBERTSON — No. 34360 — UNIVERSITY OF THE STATE OF NEW YORK

DESIGNED

DRAWN S.C.

REVIEWED E.L.

8-JK8-5.1

SKILLING, HELLE, CHRISTIANSEN, ROBERTSON — Structural & Civil Engineers

PROJECT THE WORLD TRADE CENTER | TITLE PERIMETER SECTIONS AT EL. 310 | DATE 5-1-68

REVISIONS

5-12-69 GEN. REV.

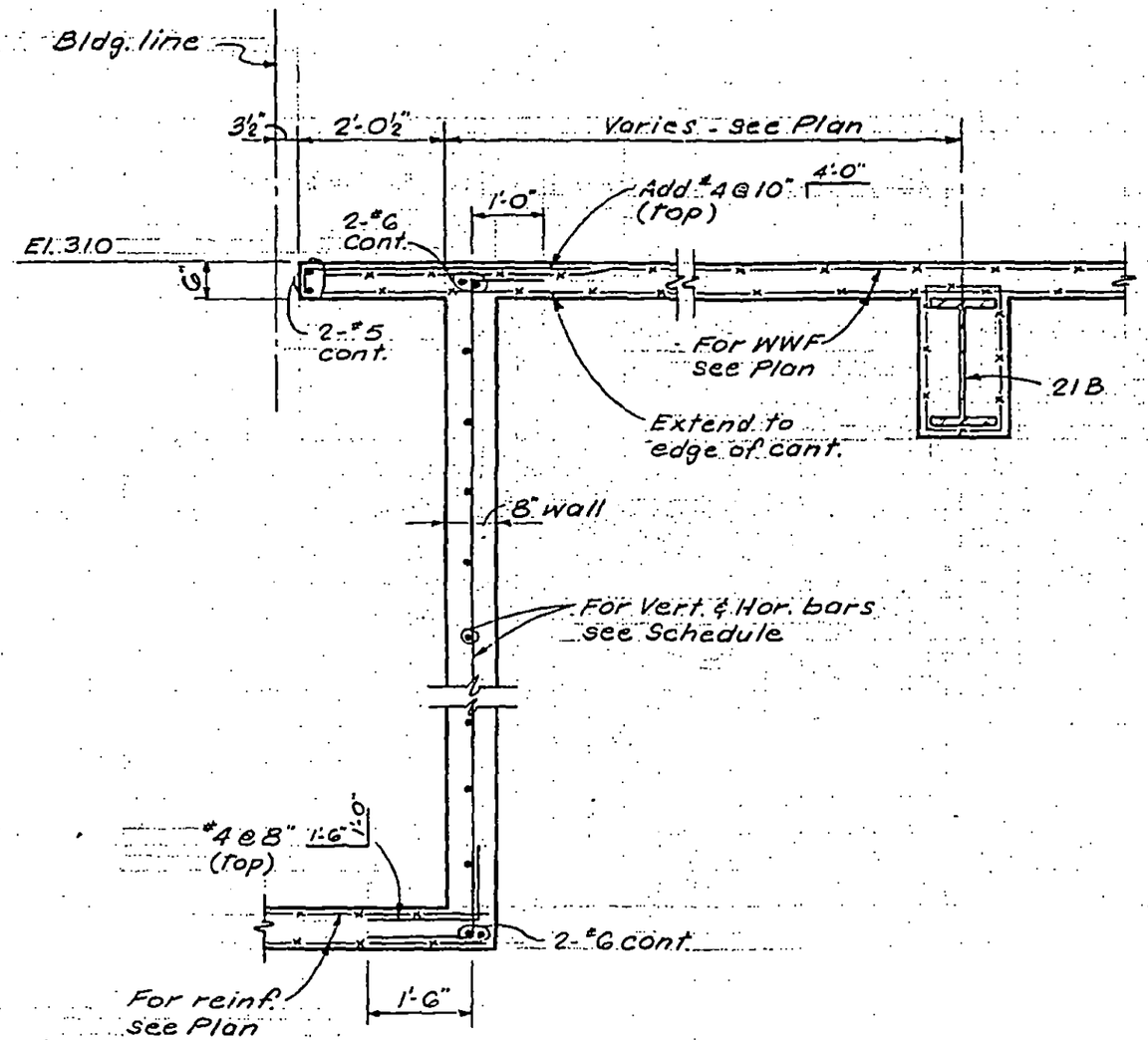

Section B-B

LICENSED PROFESSIONAL ENGINEER
LESLIE E. ROBERTSON
No. 34360
UNIVERSITY OF THE STATE OF NEW YORK

DESIGNED

DRAWN S.C.

REVIEWED E.L.

B-JKB-5.2

SKILLING, HELLE, CHRISTIANSEN, ROBERTSON — Structural & Civil Engineers

PROJECT THE WORLD TRADE CENTER | TITLE PERIMETER SECTIONS AT EL. 310 | DATE 5-1-68

REVISIONS

5-12-69 GEN. REV.

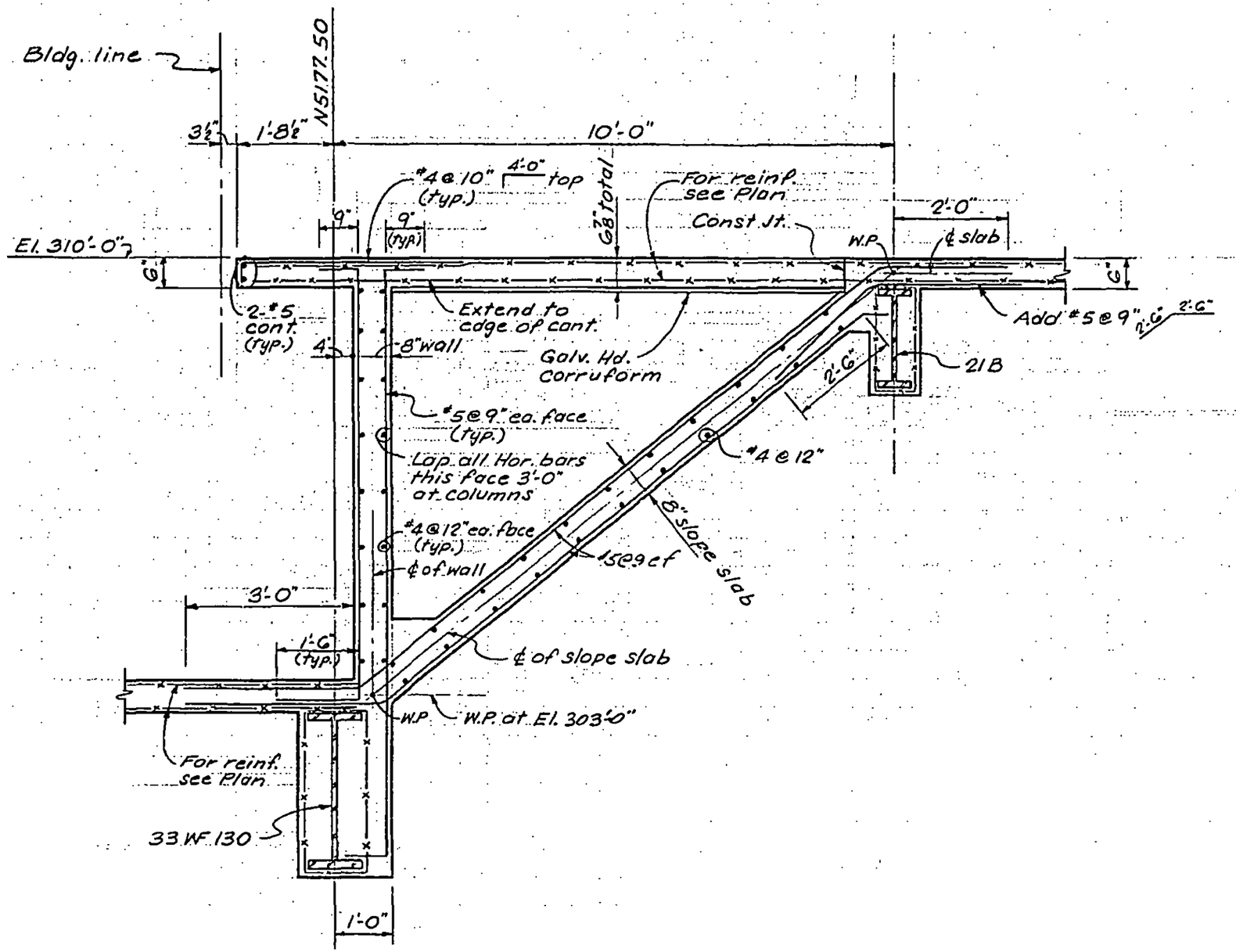

Section C-C

LICENSED PROFESSIONAL ENGINEER — LESLIE E. ROBERTSON — No. 34360 — UNIVERSITY OF THE STATE OF NEW YORK

DESIGNED

DRAWN S.C.

REVIEWED E.L.

8-JK8-5.3

SKILLING, HELLE, CHRISTIANSEN, ROBERTSON — Structural & Civil Engineers

PROJECT: THE WORLD TRADE CENTER | TITLE: PERIMETER SECTIONS AT EL 310'-0" | DATE: 5-1-68

REVISIONS

5-12-69 GEN. REV.

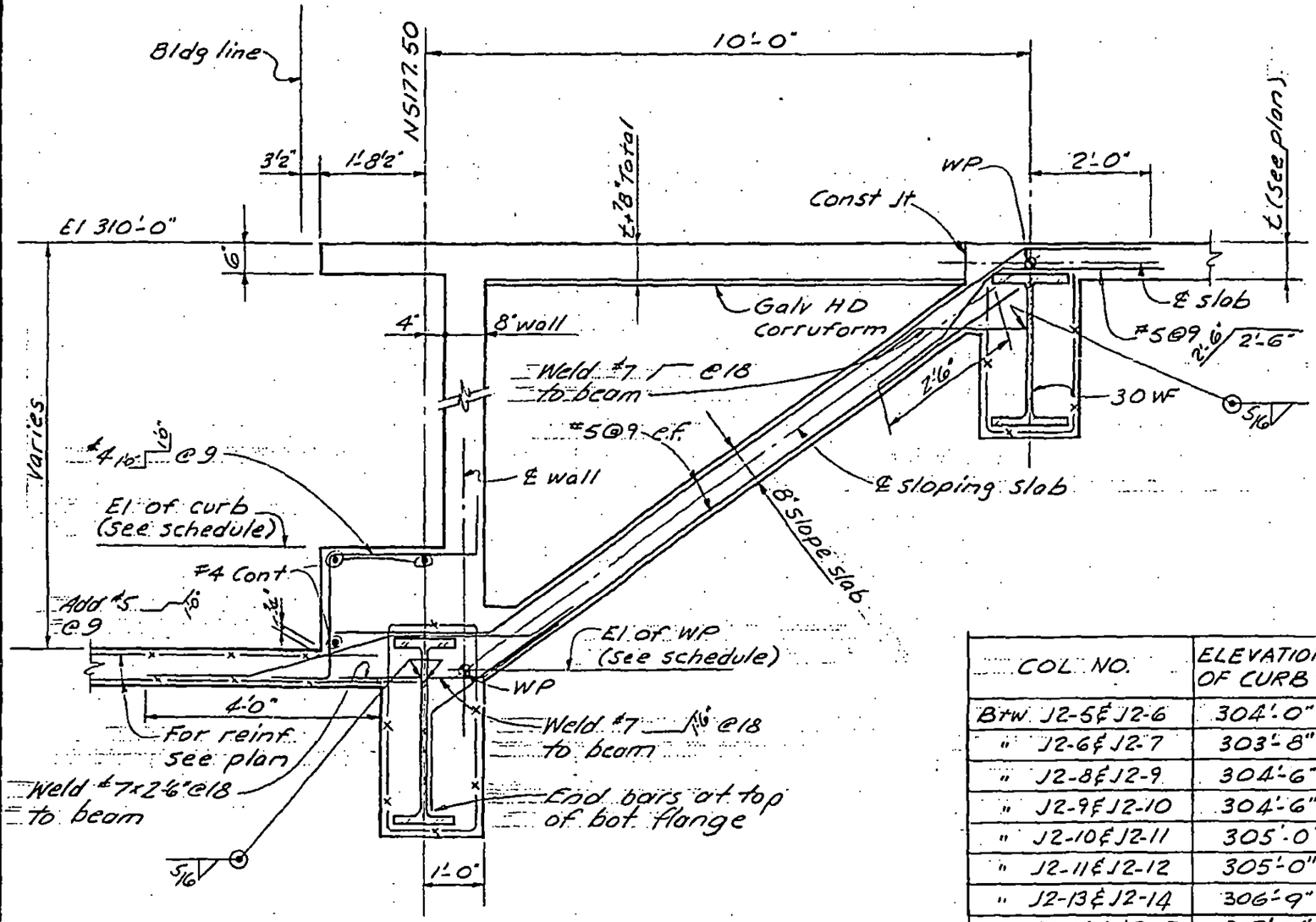

Section D-D

COL NO.	ELEVATION OF CURB	ELEVATION OF WP
Btw J2-5 & J2-6	304'-0"	303'-0"
" J2-6 & J2-7	303'-8"	303'-0"
" J2-8 & J2-9	304'-6"	303'-6"
" J2-9 & J2-10	304'-6"	303'-6"
" J2-10 & J2-11	305'-0"	303'-6"
" J2-11 & J2-12	305'-0"	303'-6"
" J2-13 & J2-14	306'-9"	304'-7"
" J2-14 & J2-15	307'-0"	304'-7"

Note:
For remaining reinf details See Section C-C

LICENSED PROFESSIONAL ENGINEER — LESLIE E. ROBERTSON — No. 34360 — UNIVERSITY OF THE STATE OF NEW YORK

DESIGNED

DRAWN A.F.

REVIEWED E.L.

8-JK8-5.4

SKILLING, HELLE, CHRISTIANSEN, ROBERTSON — Structural & Civil Engineers

PROJECT: THE WORLD TRADE CENTER | TITLE: SECTIONS | DATE: 5-1-68

REVISIONS

10-21-68

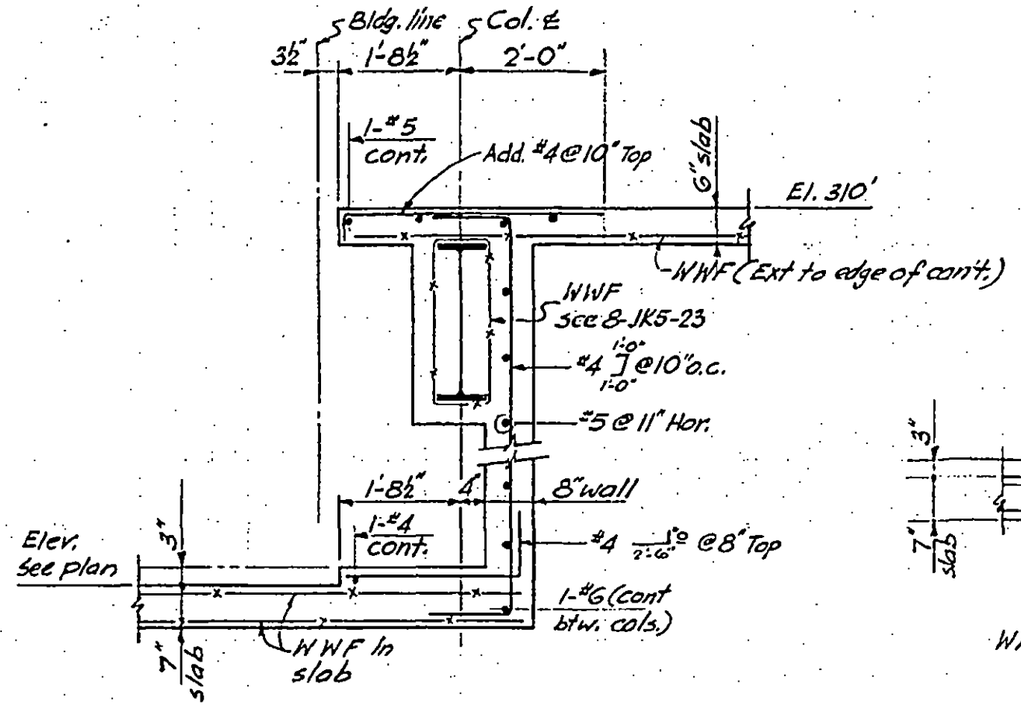

SECTION H-H
(½" = 1'-0")

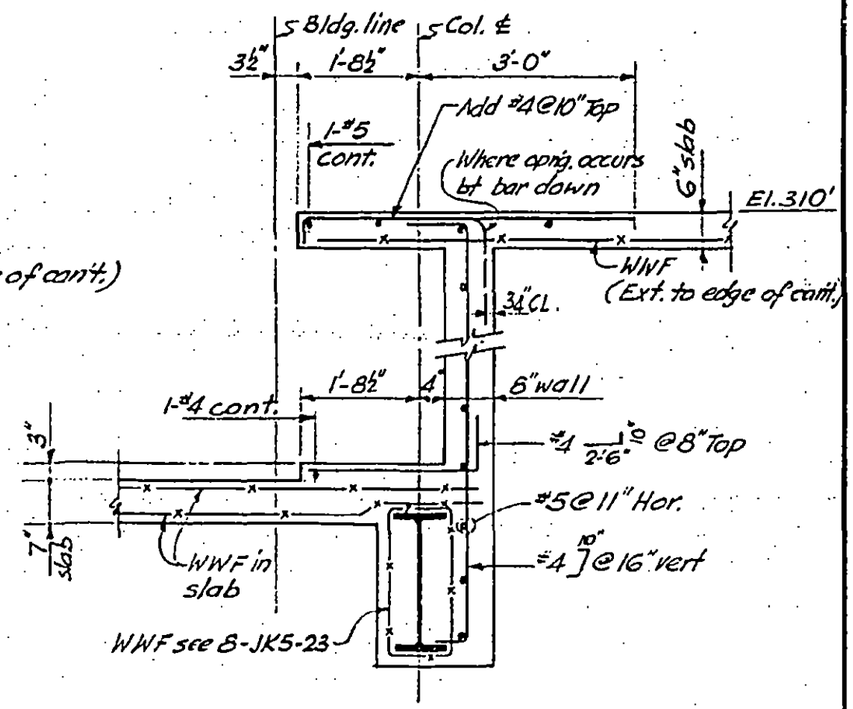

SECTION J-J
(½" = 1'-0")

LICENSED PROFESSIONAL ENGINEER
LESLIE E. ROBERTSON
No. 34360
UNIVERSITY OF THE STATE OF NEW YORK

DESIGNED

DRAWN

REVIEWED

8-JK8-5.5

SKILLING, HELLE, CHRISTIANSEN, ROBERTSON — Structural & Civil Engineers

PROJECT THE WORLD TRADE CENTER | TITLE PERIMETER SECTIONS – EL. 310 | DATE 5-1-68

REVISIONS

10-21-68

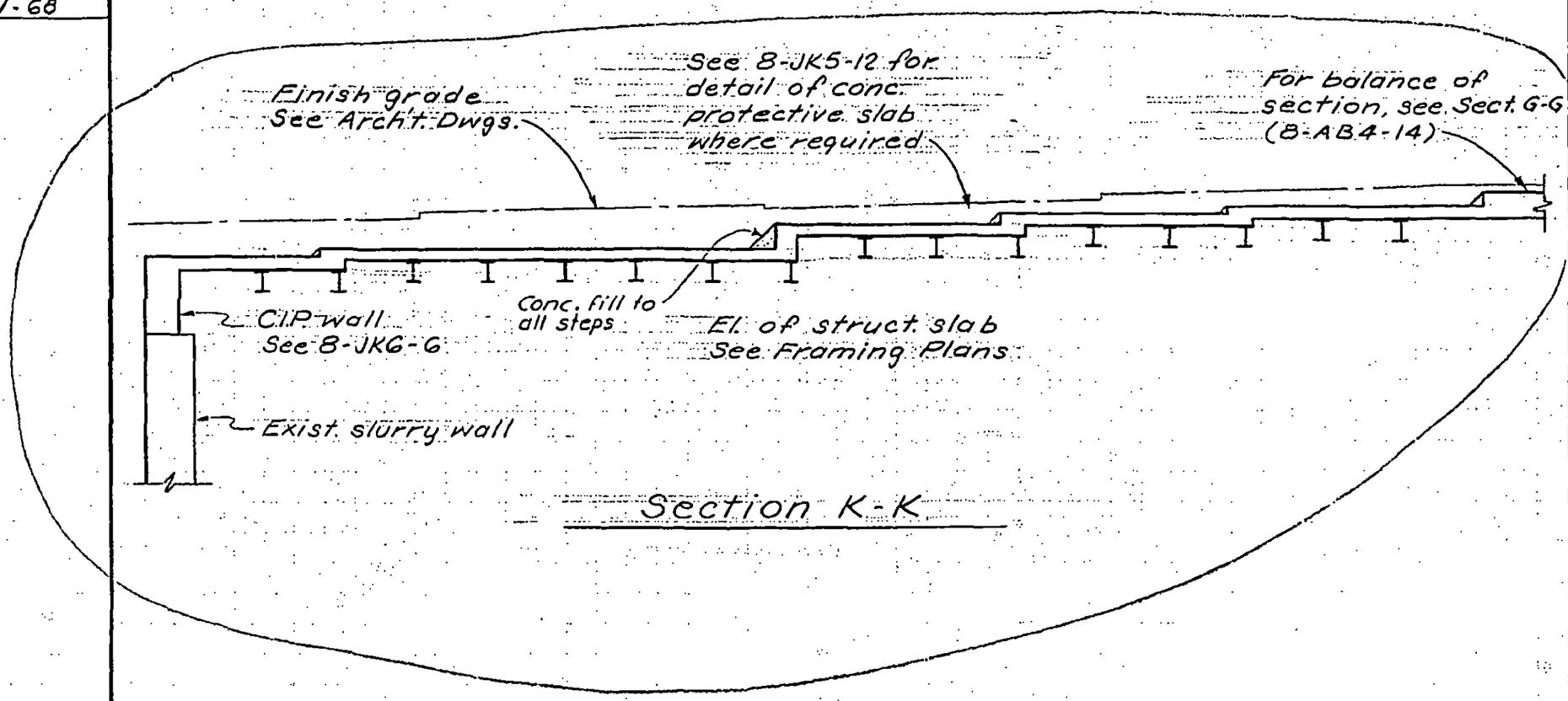

Section K-K

LICENSED PROFESSIONAL ENGINEER
LESLIE E. ROBERTSON
No. 34360
UNIVERSITY OF THE STATE OF NEW YORK

DESIGNED

DRAWN

REVIEWED

8-JK8-5.6

SKILLING, HELLE, CHRISTIANSEN, ROBERTSON — Structural & Civil Engineers

PROJECT THE WORLD TRADE CENTER | TITLE PERIMETER SECTION AT EL 310'-0" | DATE 5-1-68

REVISIONS

5-12-69 GEN. REV.

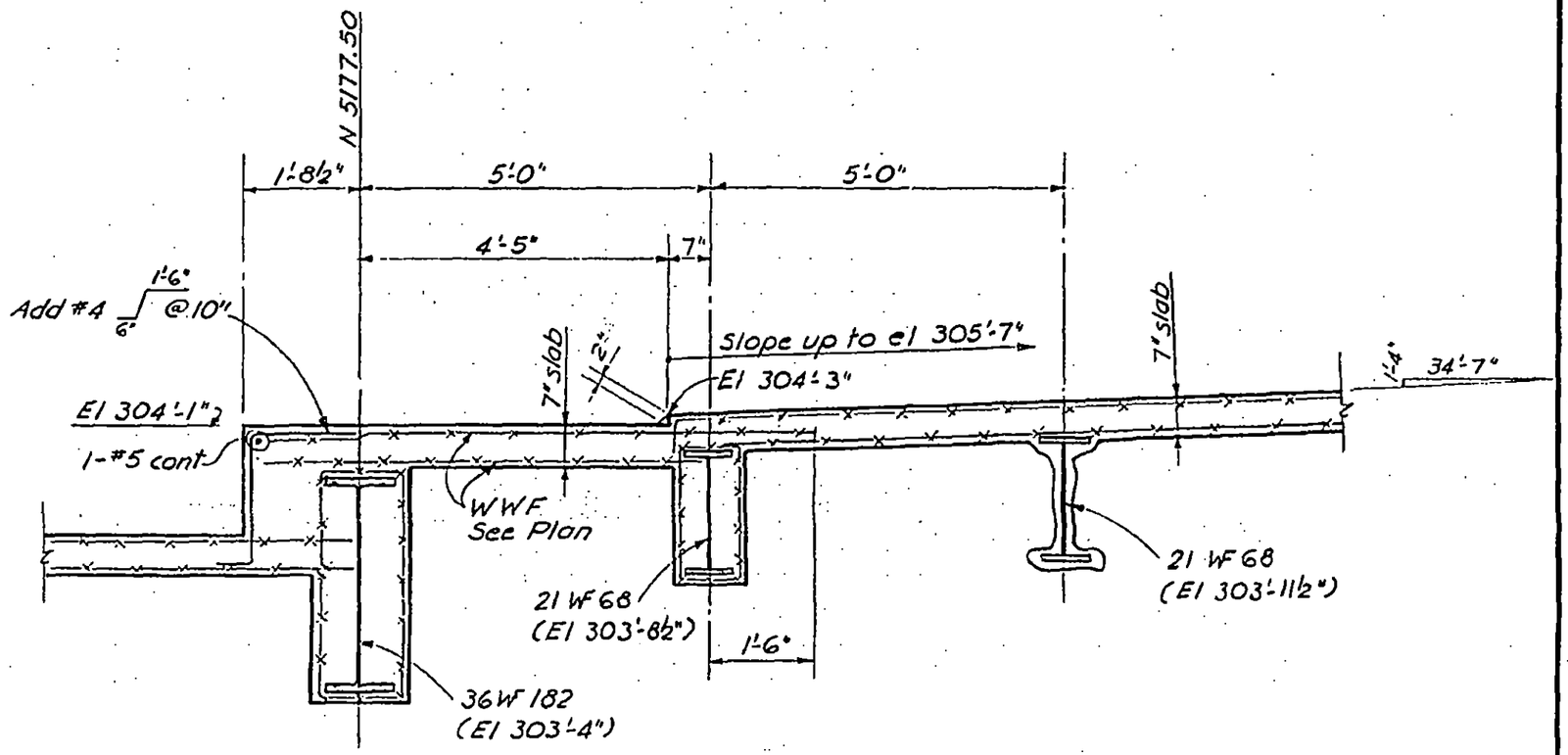

Section L-L

LICENSED PROFESSIONAL ENGINEER LESLIE E. ROBERTSON No. 34360 UNIVERSITY OF THE STATE OF NEW YORK

DESIGNED

DRAWN F. L. Smith

REVIEWED E.L.

8-JK8-5.7

SKILLING, HELLE, CHRISTIANSEN, ROBERTSON — Structural & Civil Engineers

PROJECT THE WORLD TRADE CENTER | TITLE PERIMETER SECTION AT EL 310'-0" | DATE 5-12-69

REVISIONS

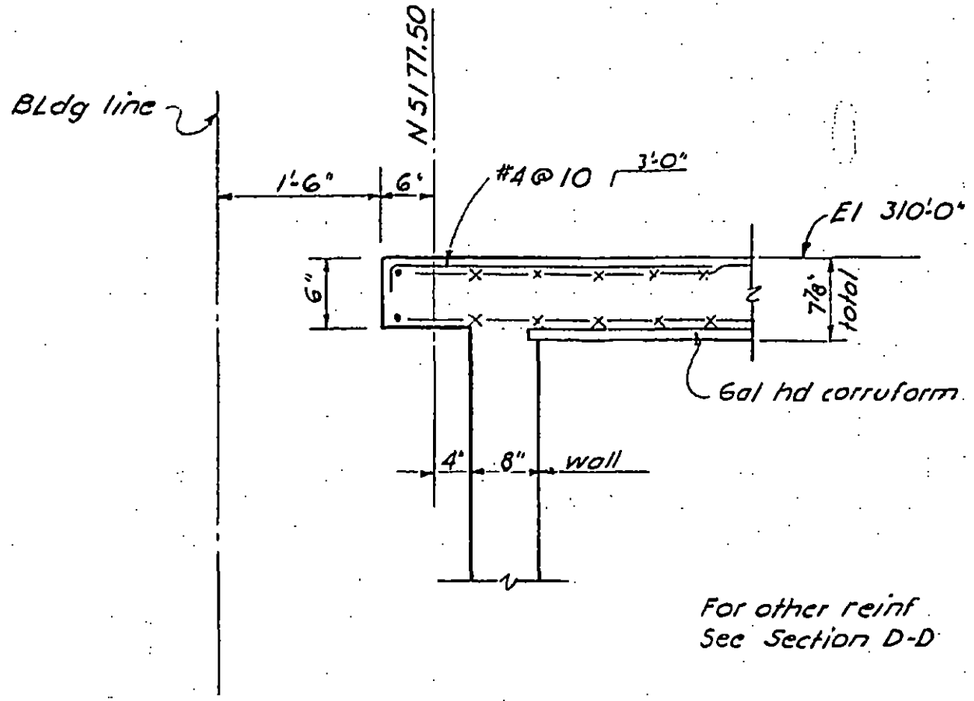

For other reinf
See Section D-D

Section M-M

LICENSED PROFESSIONAL ENGINEER
LESLIE E. ROBERTSON
No. 34300
UNIVERSITY OF THE STATE OF NEW YORK

DESIGNED

DRAWN F. Smith

REVIEWED E.L.

8-JK8-5.8

SKILLING, HELLE, CHRISTIANSEN, ROBERTSON — Structural & Civil Engineers

PROJECT	TITLE	DATE
THE WORLD TRADE CENTER	PERIMETER SECTIONS AT EL 310'-0"	5-12-69

REVISIONS

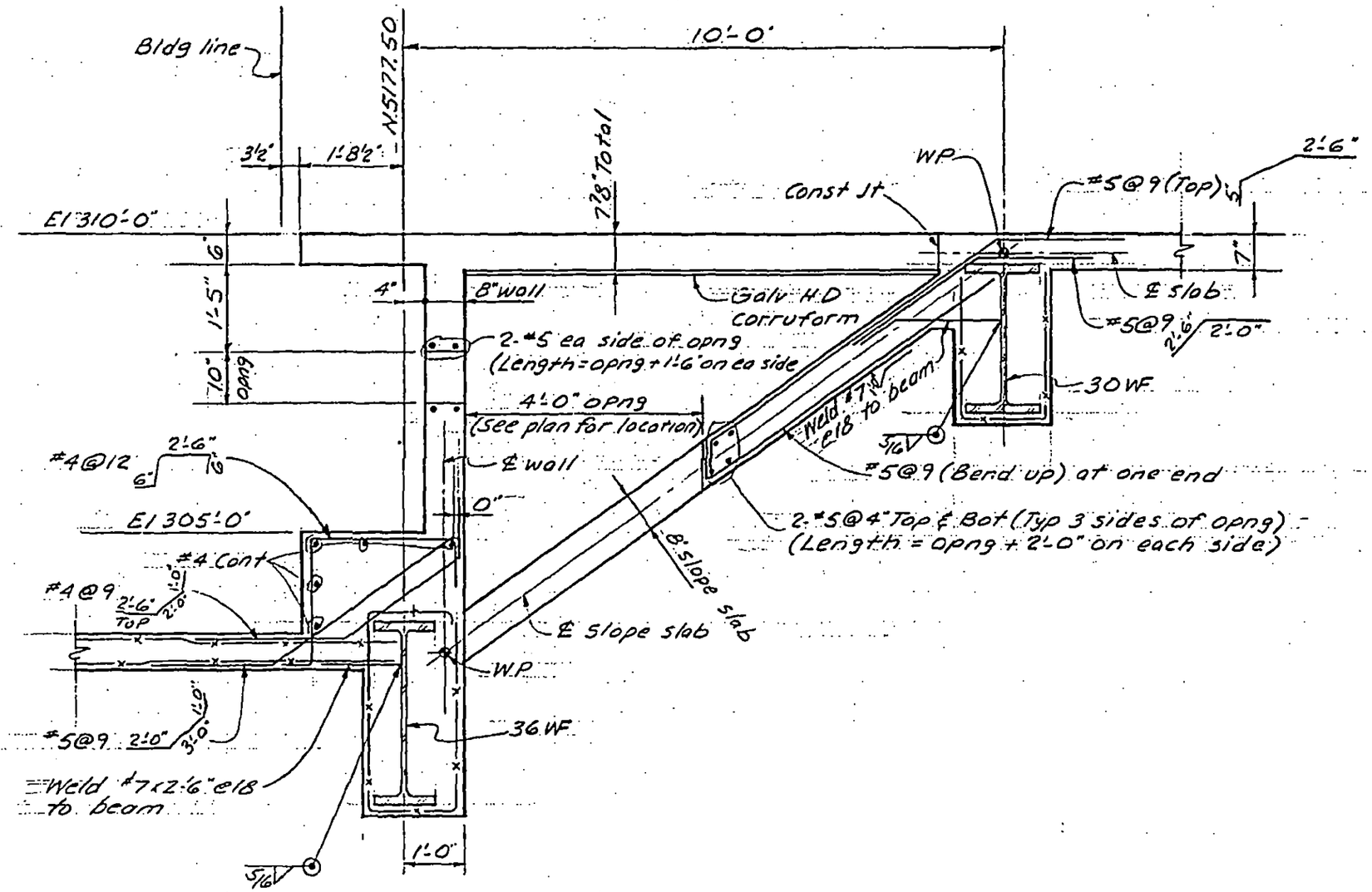

Section N-N

Note:
For remaining reinf details see section O-O

LICENSED PROFESSIONAL ENGINEER
LESLIE E. ROBERTSON
No. 34360
UNIVERSITY OF THE STATE OF NEW YORK

DESIGNED

DRAWN A.F.

REVIEWED E.L.

8-JK8-5.9

SKILLING, HELLE, CHRISTIANSEN, ROBERTSON — Structural & Civil Engineers

PROJECT THE WORLD TRADE CENTER | TITLE PERIMETER SECTIONS AT EL 310'-0" | DATE 5-12-69

REVISIONS
7-16-69

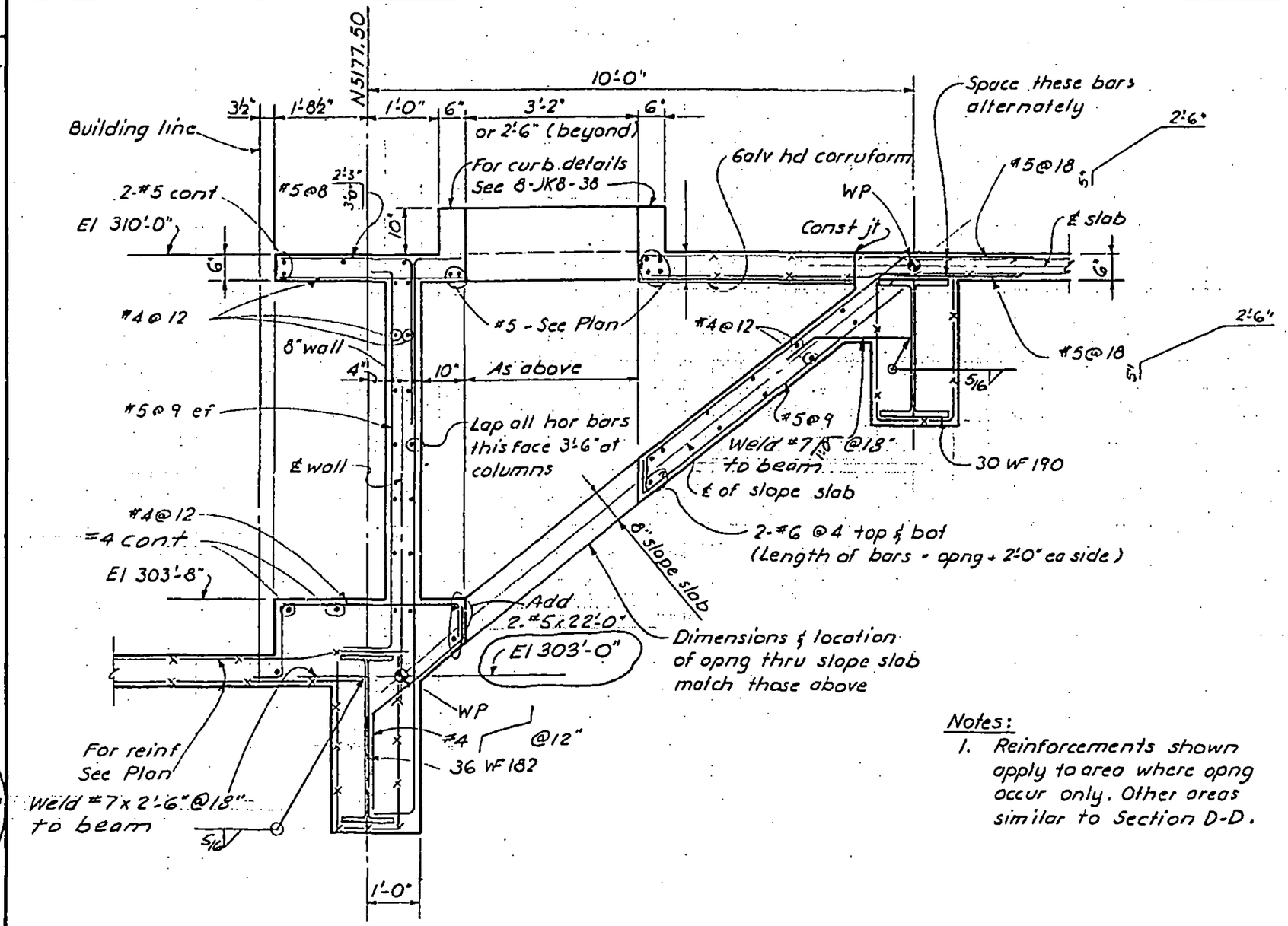

Section P-P

Notes:
1. Reinforcements shown apply to area where opng occur only. Other areas similar to Section D-D.

LICENSED PROFESSIONAL ENGINEER
LESLIE E. ROBERTSON
No. 34360
UNIVERSITY OF THE STATE OF NEW YORK

DESIGNED

DRAWN
F. Smith

REVIEWED
E.L.

8-JK8-5.10

SKILLING, HELLE, CHRISTIANSEN, ROBERTSON — Structural & Civil Engineers

PROJECT: THE WORLD TRADE CENTER | TITLE: PERIMETER SECTIONS AT EL. 310'-0" | DATE: 6-11-69

REVISIONS

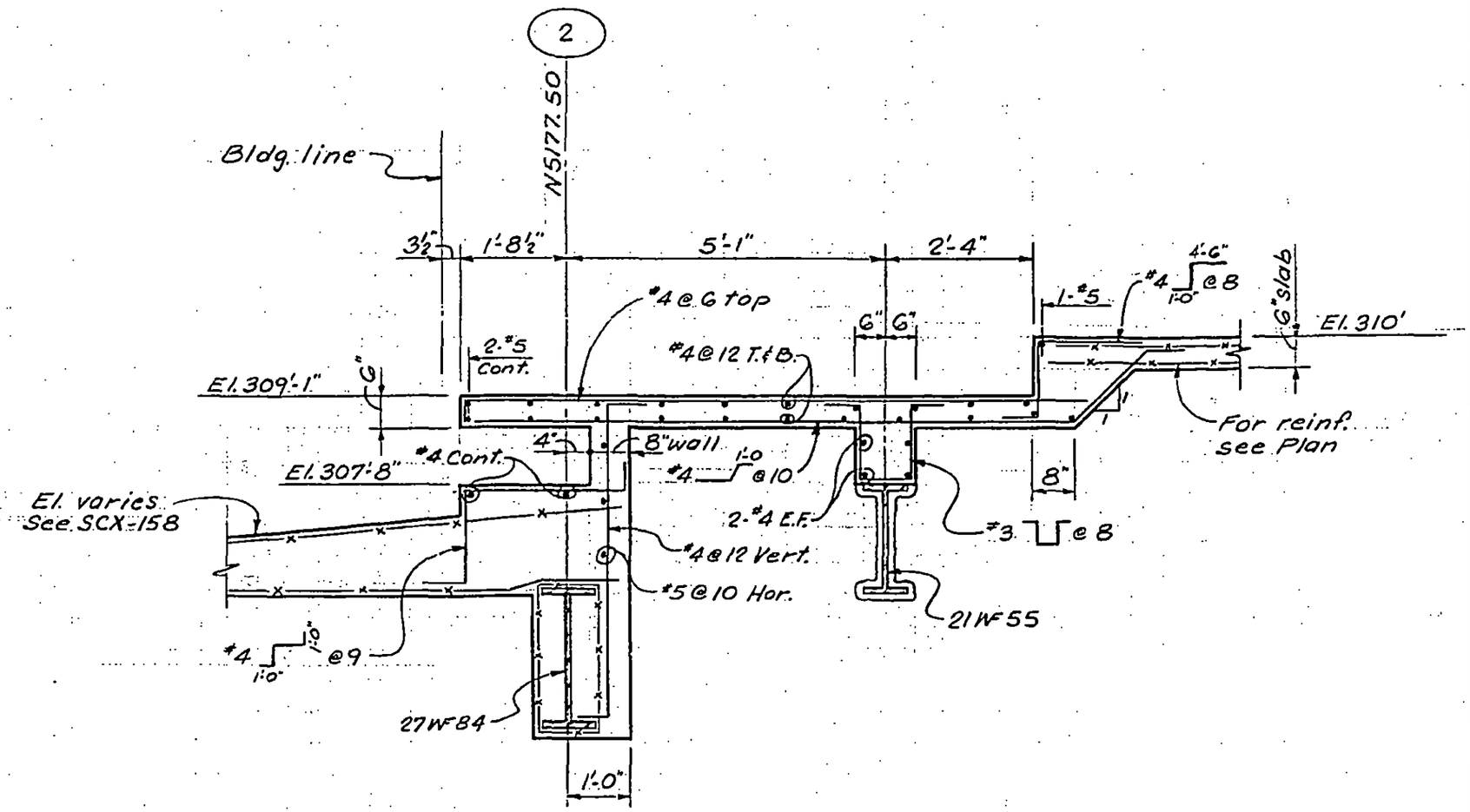

Section Q-Q

(½" = 1'-0")

LICENSED PROFESSIONAL ENGINEER — LESLIE E. ROBERTSON — No. 34360 — UNIVERSITY OF THE STATE OF NEW YORK

DESIGNED

DRAWN: S.C.

REVIEWED: E.L.

8-JK8-5.11

SKILLING, HELLE, CHRISTIANSEN, ROBERTSON — Structural & Civil Engineers

PROJECT THE WORLD TRADE CENTER | TITLE PERIMETER SECTIONS AT EL 310'-0" | DATE 6-11-69

REVISIONS

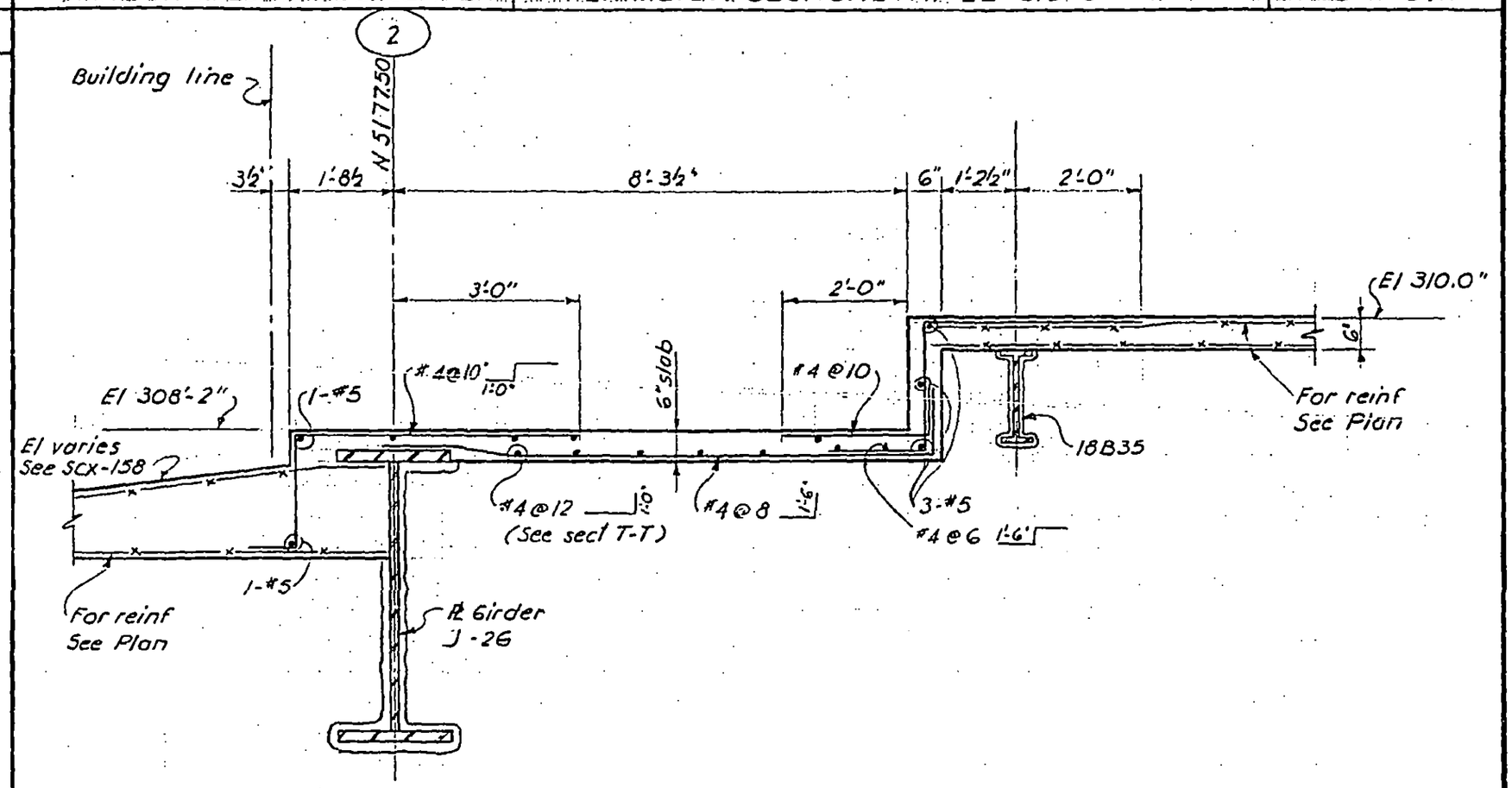

Section R-R

(½" = 1'-0")

LICENSED PROFESSIONAL ENGINEER
LESLIE E. ROBERTSON
No. 34360
UNIVERSITY OF THE STATE OF NEW YORK

DESIGNED

DRAWN
F. Smith

REVIEWED

8-JK8-5.12

SKILLING, HELLE, CHRISTIANSEN, ROBERTSON — Structural & Civil Engineers

PROJECT THE WORLD TRADE CENTER | TITLE PERIMETER SECTIONS AT EL 310'-0" | DATE 6-11-69

REVISIONS

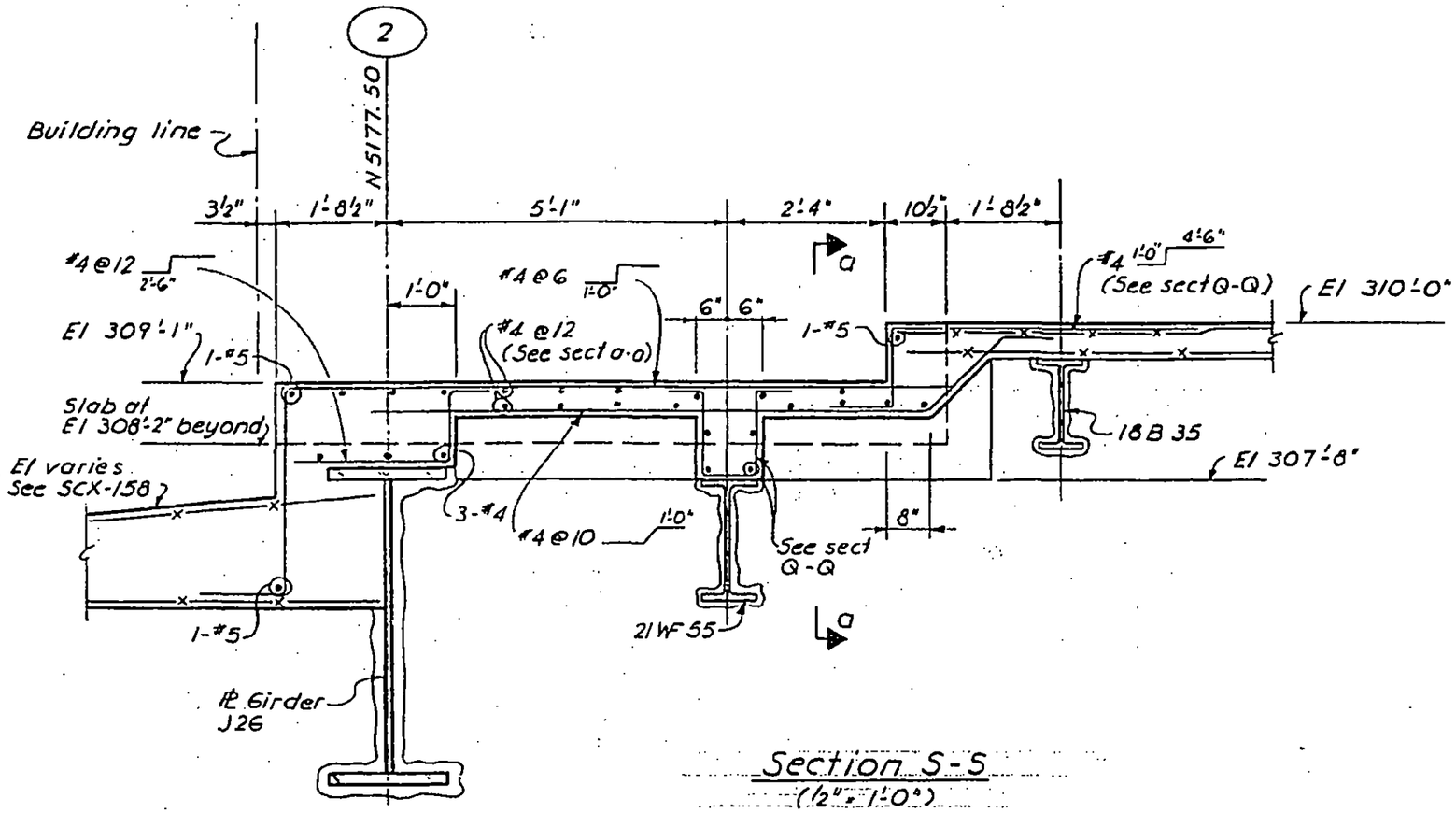

Section S-S
(½" = 1'-0")

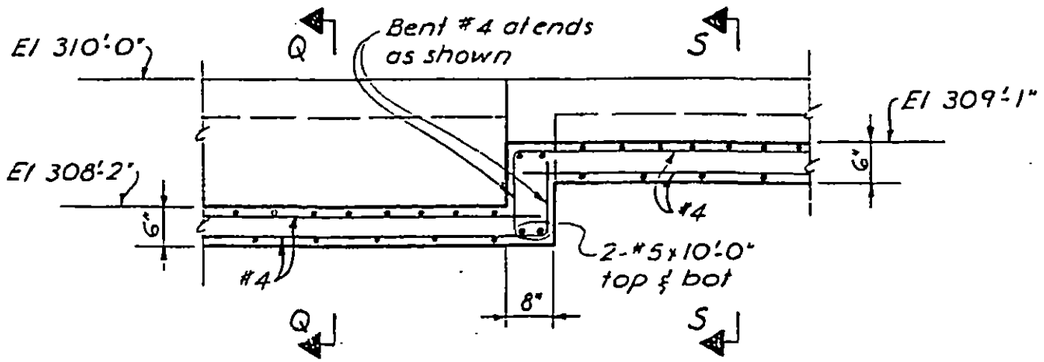

Section a-a
(½" = 1'-0")

LICENSED PROFESSIONAL ENGINEER
LESLIE E. ROBERTSON
No. 34360
UNIVERSITY OF THE STATE OF NEW YORK

DESIGNED

DRAWN F. Smith

REVIEWED E.L.

8-JK8-5.13

SKILLING, HELLE, CHRISTIANSEN, ROBERTSON — Structural & Civil Engineers

PROJECT: THE WORLD TRADE CENTER | TITLE: PERIMETER SECTIONS AT EL 310'-0" | DATE: 6-11-69

REVISIONS

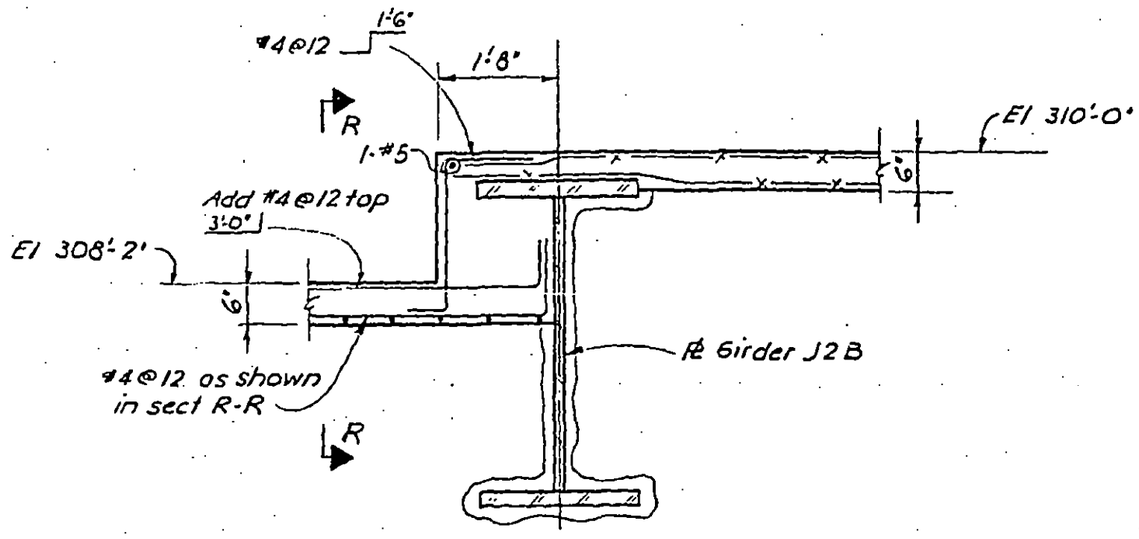

Section T-T

(½" = 1'-0")

LICENSED PROFESSIONAL ENGINEER — LESLIE E. ROBERTSON — No. 34360 — UNIVERSITY OF THE STATE OF NEW YORK

DESIGNED

DRAWN: F. Smith

REVIEWED: E.L.

8-JK8-5.14

SKILLING, HELLE, CHRISTIANSEN, ROBERTSON — Structural & Civil Engineers

PROJECT: THE WORLD TRADE CENTER | TITLE: PERIMETER SECTIONS AT EL 310'-0" | DATE: 6-11-69

REVISIONS

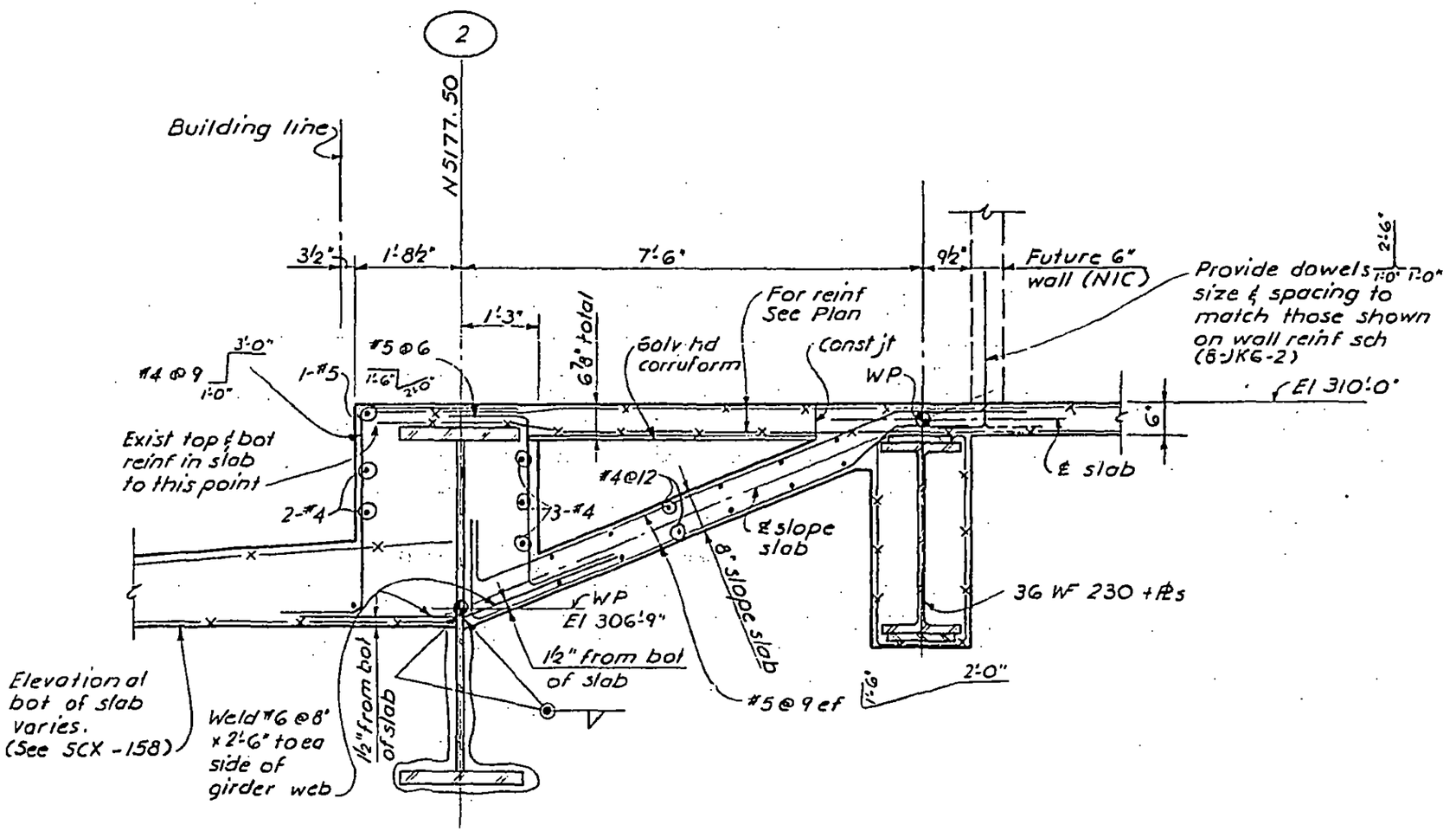

Section U-U
(½" = 1'-0")

LICENSED PROFESSIONAL ENGINEER — LESLIE E. ROBERTSON — No. 34360 — UNIVERSITY OF THE STATE OF NEW YORK

DESIGNED

DRAWN: F. Smith

REVIEWED: E.L.

8-JK8-5.15

SKILLING, HELLE, CHRISTIANSEN, ROBERTSON — Structural & Civil Engineers

PROJECT: THE WORLD TRADE CENTER | TITLE: PERIMETER SECTIONS AT EL 310'-0" | DATE: 6-11-69

REVISIONS

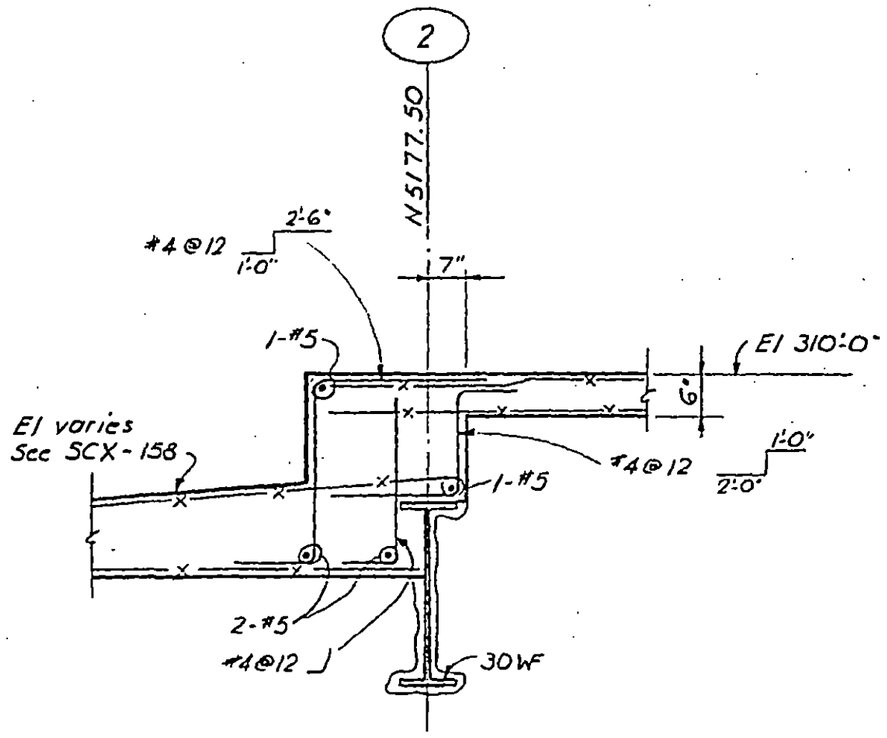

Section V-V

(½" = 1'-0")

LICENSED PROFESSIONAL ENGINEER
LESLIE E. ROBERTSON
No. 34360
UNIVERSITY OF THE STATE OF NEW YORK

DESIGNED

DRAWN: F. Smith

REVIEWED: E.L.

8-JK8-5.16

SKILLING, HELLE, CHRISTIANSEN, ROBERTSON — Structural & Civil Engineers

PROJECT: THE WORLD TRADE CENTER | TITLE: PERIMETER SECTIONS AT EL 310'-0" | DATE: 6-11-69

REVISIONS

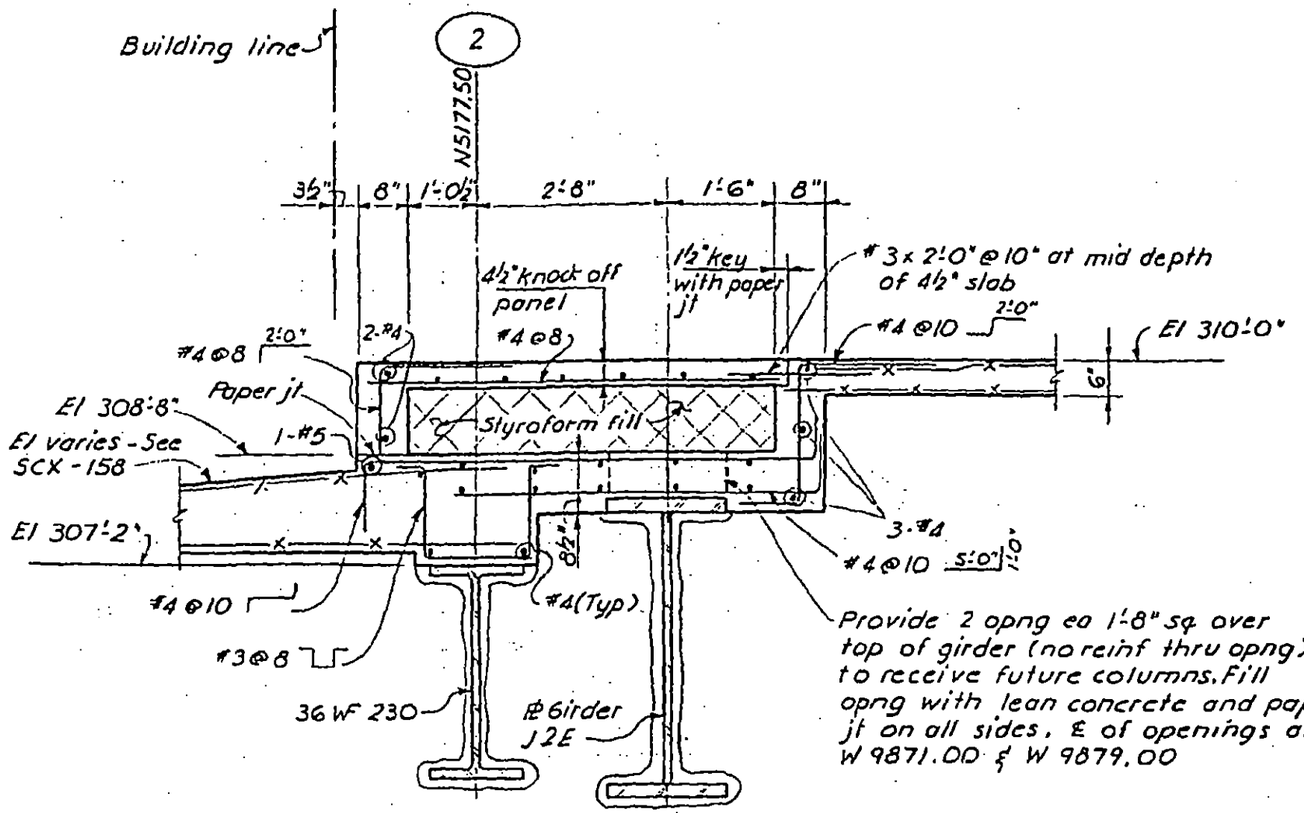

Section W-W
(½" = 1'-0")

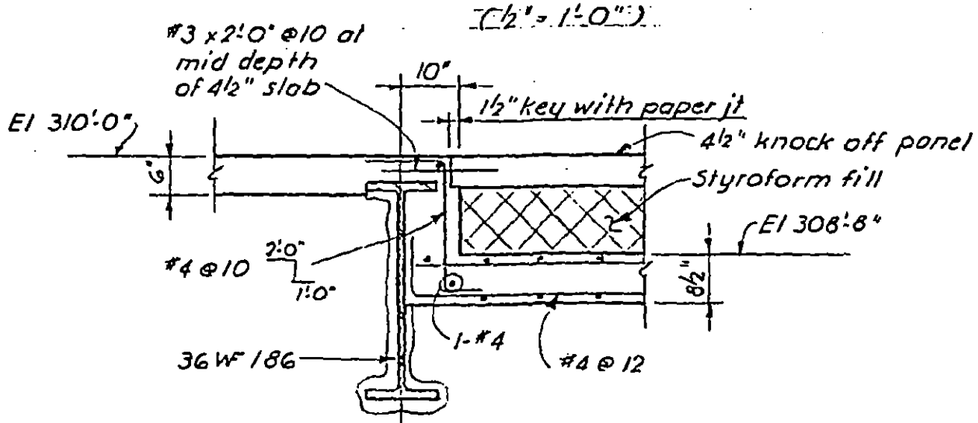

Section X-X
(½" = 1'-0")

8-JK8-5.17

LICENSED PROFESSIONAL ENGINEER
LESLIE E. ROBERTSON
No. 34360
UNIVERSITY OF THE STATE OF NEW YORK

DESIGNED

DRAWN F. Smith

REVIEWED

SKILLING, HELLE, CHRISTIANSEN, ROBERTSON — Structural & Civil Engineers

PROJECT THE WORLD TRADE CENTER | TITLE PERIMETER SECTIONS AT EL 310'-0" | DATE 6-11-69

REVISIONS

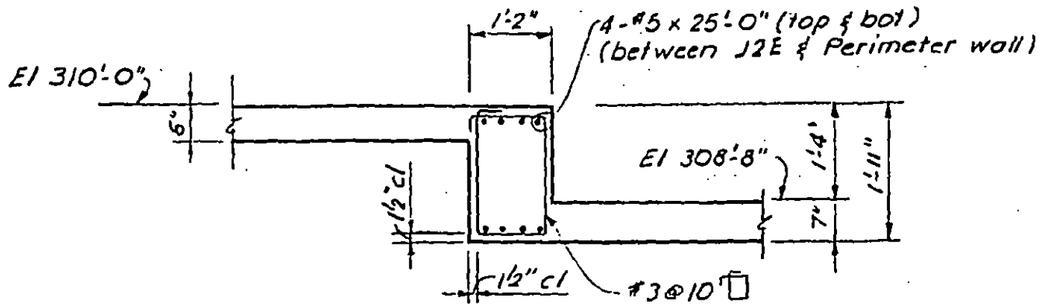

Section Y-Y
(½" = 1'-0")

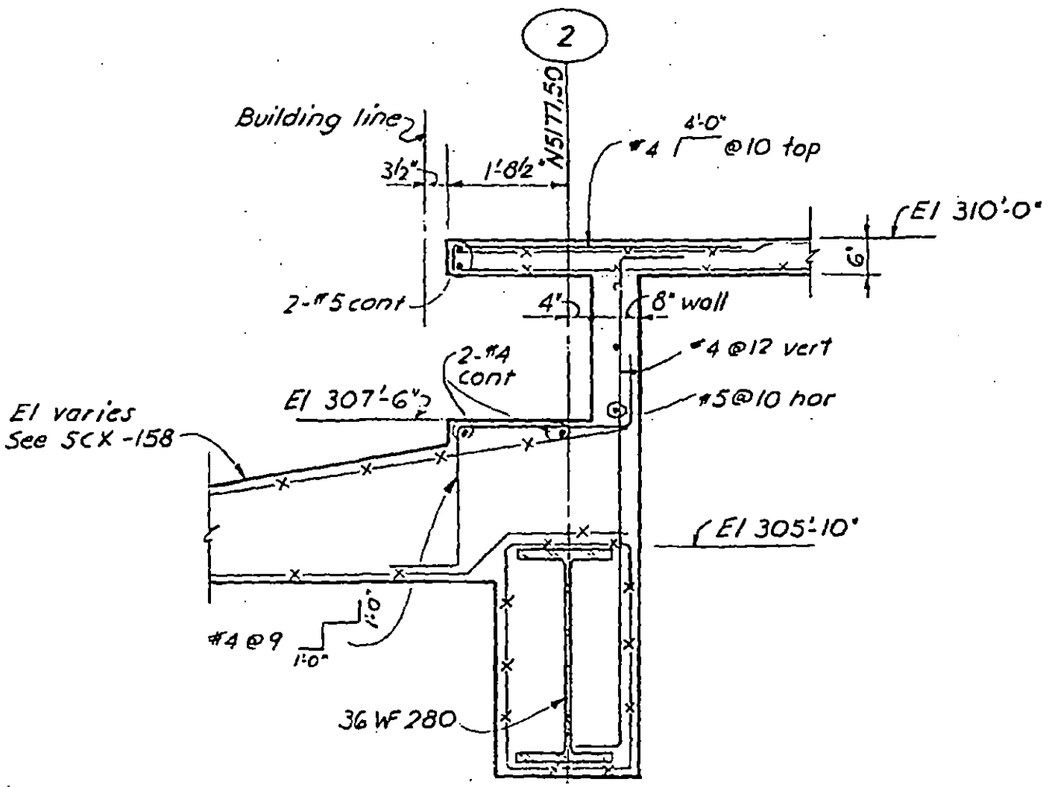

Section Z-Z
(½" = 1'-0")

LICENSED PROFESSIONAL ENGINEER
LESLIE E. ROBERTSON
No. 34360
UNIVERSITY OF THE STATE OF NEW YORK

DESIGNED

DRAWN F. Smith

8-JK 8-5.18

SKILLING, HELLE, CHRISTIANSEN, ROBERTSON — Structural & Civil Engineers

PROJECT: THE WORLD TRADE CENTER | TITLE: DET. AT EXIST. GRILLAGE OVER TOP OF SLURRY WALL | DATE: 6-11-69

REVISIONS

10-1-69

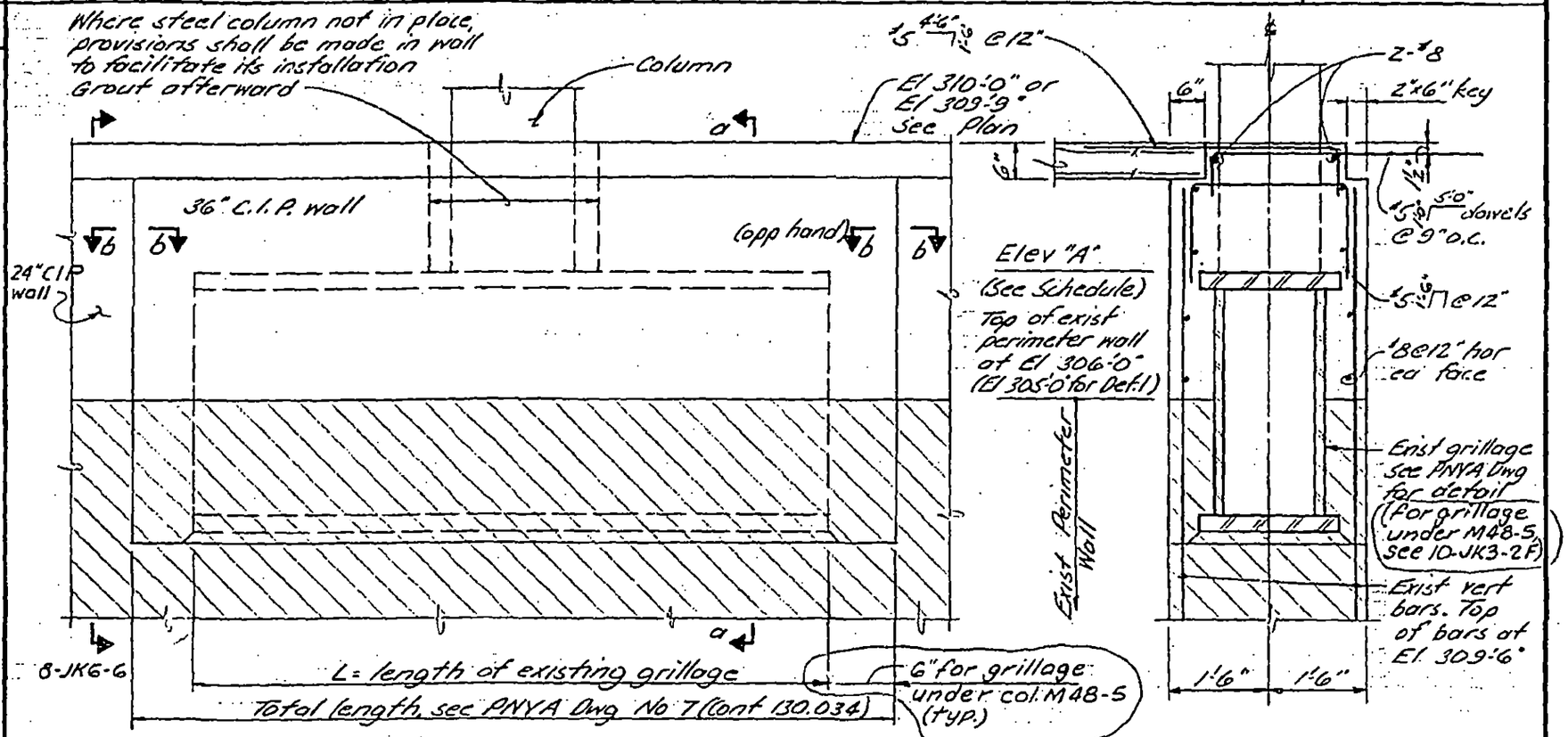

ELEVATION (LOOKING EAST)
(No scale)

Section a-a

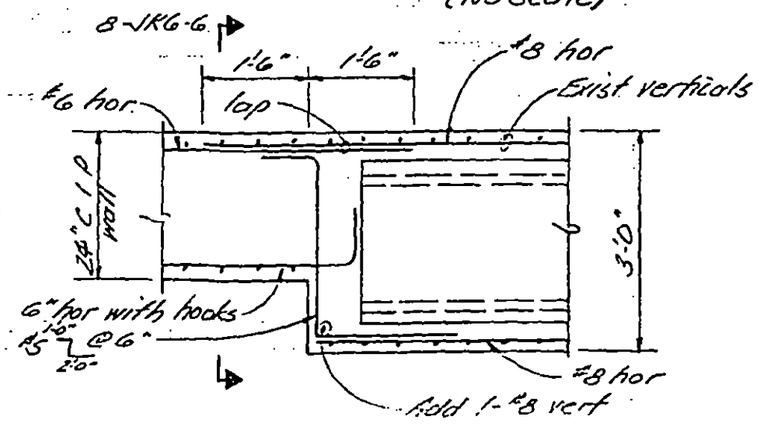

Section b-b

DETAIL NO.	A TOP ELEV OF EXIST GRILLAGE	L LENGTH OF EXIST. GRILLAGE
* 1	305'-9"	7'-0⅜"
2	308'-0"	10'-0"
3	307'-0"	5'-0"
4	306'-6"	6'-0"

NOTES:
1. * For Det. 1 a 48" deep girder (as shown on NE Bldg Dwgs SNE-53 [WTC-235.00]) sits on top of grillage at N5167.13, W9839.50. Stop all hor bars interfered with by this girder with hooks. If this girder is not in place make provisions for its installation, Grout afterward. See also Det 'A' on 8-JK8-7.2
2. Concrete for 24" or 36" C.I.P. walls to be f'_c = 4000 psi.

8-JK8-7.1

LICENSED PROFESSIONAL ENGINEER — LESLIE E. ROBERTSON — No. 34360 — UNIVERSITY OF THE STATE OF NEW YORK

DESIGNED

DRAWN J.A.

REVIEWED

SKILLING, HELLE, CHRISTIANSEN, ROBERTSON — Structural & Civil Engineers

PROJECT: THE WORLD TRADE CENTER | TITLE: DETAIL AT PERIMETER WALL | DATE: 6-11-69

REVISIONS

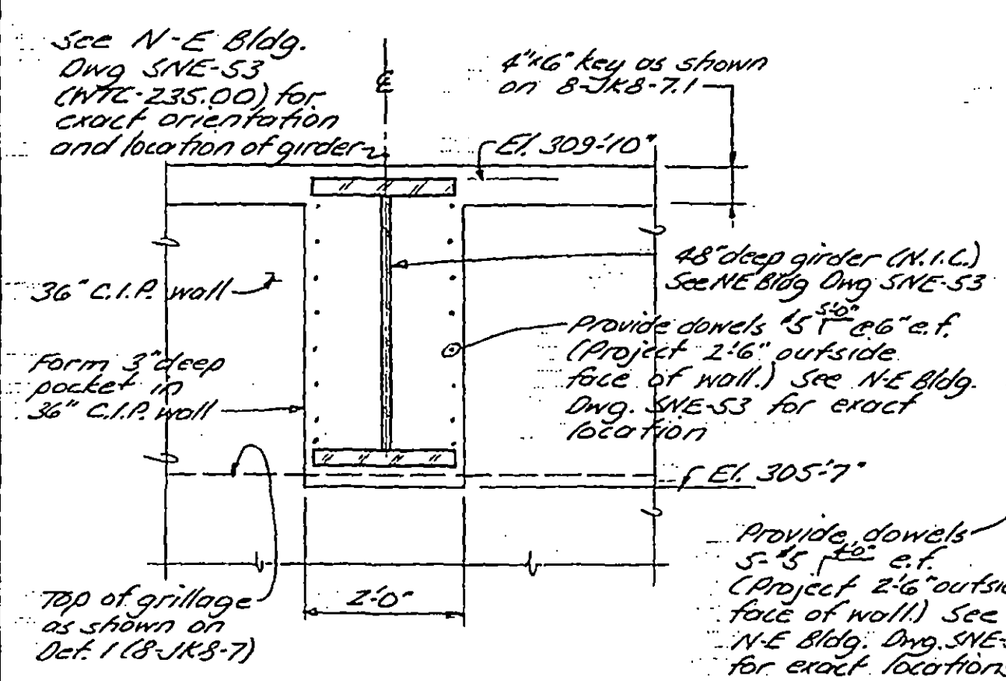

DETAIL 'A'
(LOOKING WEST)
(½" = 1'-0")

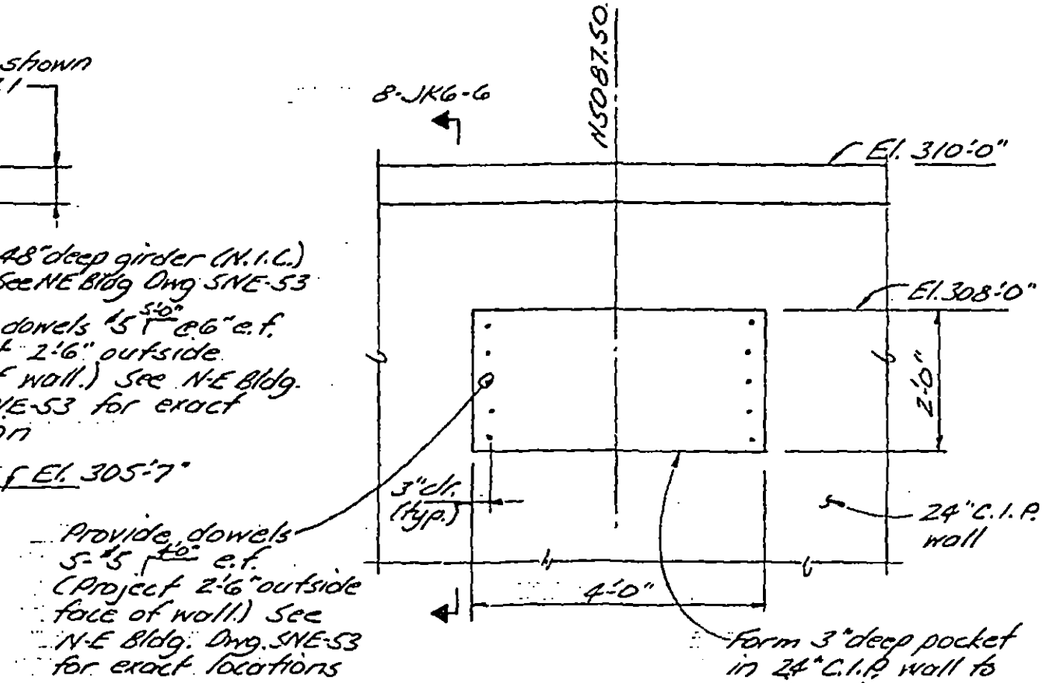

DETAIL 'B'
(LOOKING WEST)
(½" = 1'-0")

LICENSED PROFESSIONAL ENGINEER
LESLIE E. ROBERTSON
No. 34360
UNIVERSITY OF THE STATE OF NEW YORK

DESIGNED

DRAWN
J.A.

REVIEWED

8-JK8-7.2

SKILLING, HELLE, CHRISTIANSEN, ROBERTSON — Structural & Civil Engineers

PROJECT THE WORLD TRADE CENTER | TITLE DETAIL OF COLUMN FTG. OVER TOP OF SLURRY WALL | DATE 10-1-69

REVISIONS

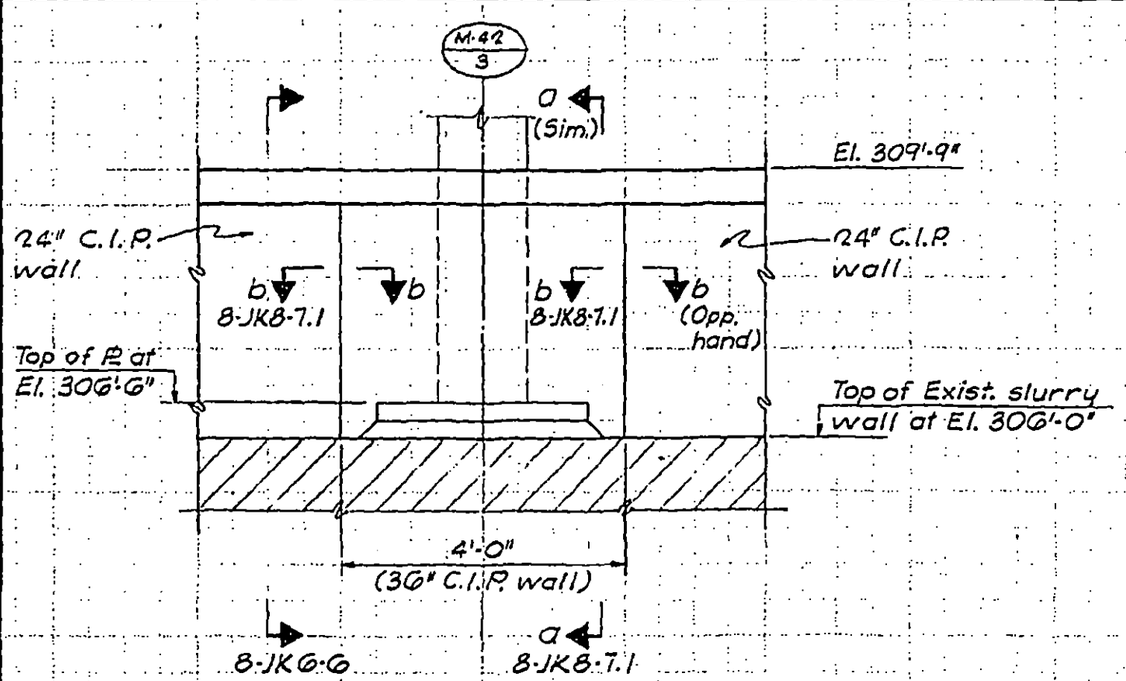

SECTION a-a

(½"=1'-0")

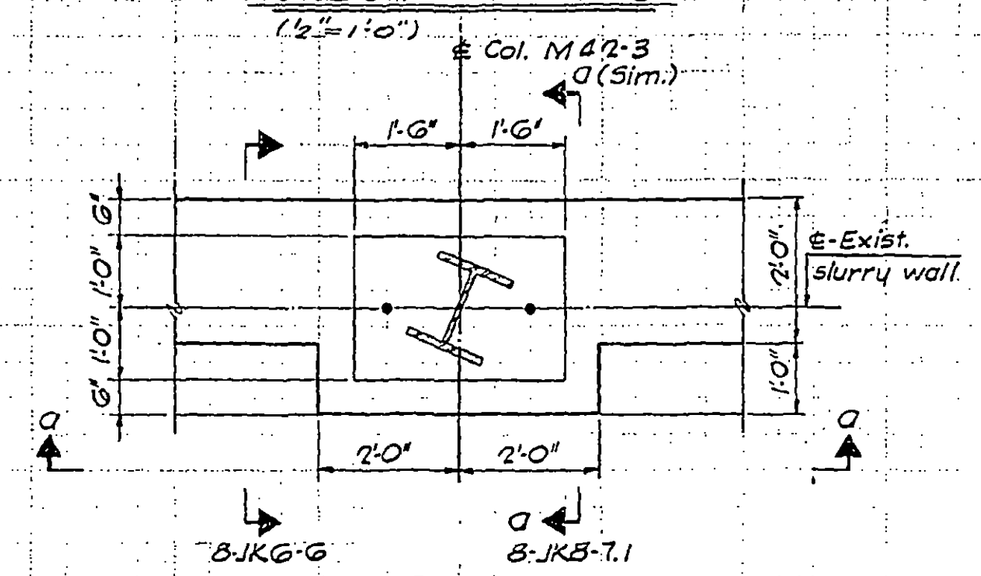

PLAN

(½"=1'-0")

Notes

1. Concrete for C.I.P. wall to be f'_c = 4000 psi

LICENSED PROFESSIONAL ENGINEER — LESLIE E. ROBERTSON — No. 34360 — UNIVERSITY OF THE STATE OF NEW YORK

DESIGNED

DRAWN G.K.

REVIEWED E.L.

8-JK8-7.3

SKILLING, HELLE, CHRISTIANSEN, ROBERTSON — Structural & Civil Engineers

PROJECT THE WORLD TRADE CENTER | TITLE SECTIONS @ ELEVATION 253'-0" | DATE 12-18-68

REVISIONS

4-2-69

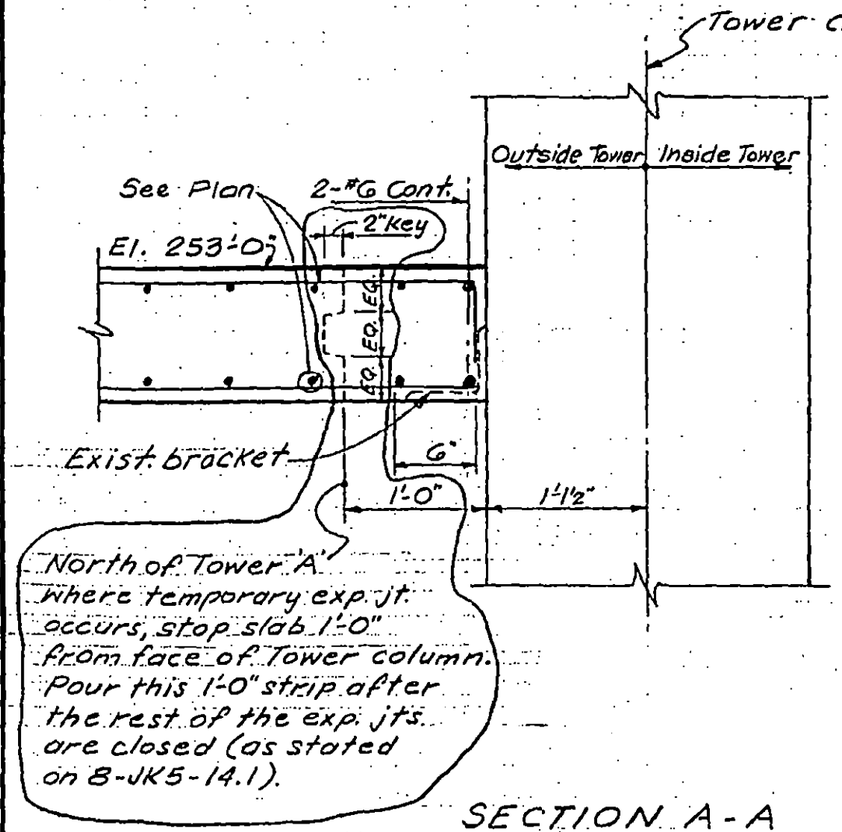

SECTION A-A

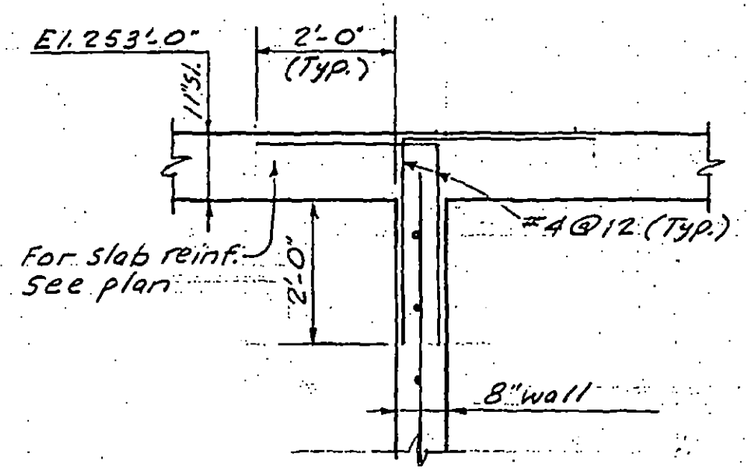

SECTION B-B

LICENSED PROFESSIONAL ENGINEER
LESLIE E. ROBERTSON
No. 34360
UNIVERSITY OF THE STATE OF NEW YORK

DESIGNED

DRAWN S.C.

REVIEWED

8-JK8-9.1

SKILLING, HELLE, CHRISTIANSEN, ROBERTSON — Structural & Civil Engineers

PROJECT THE WORLD TRADE CENTER | TITLE SECTIONS AT EL. 253'-0" | DATE 12-18-68

REVISIONS
4-2-69
5-6-69

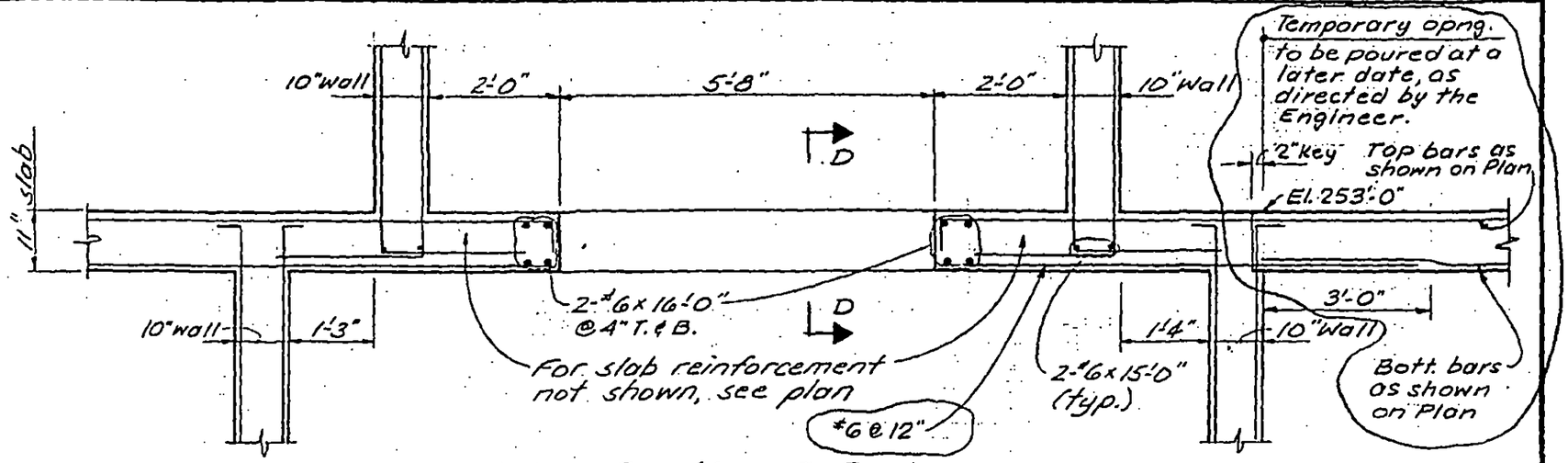

Section C-C
(SCJ-29)

Notes:
1. For location & size of Mech. openings thru R.C. wall, see Arch't. & Mech. Dwgs.
2. See 8-JKG-2.1 & 2.2 for typical wall reinf.

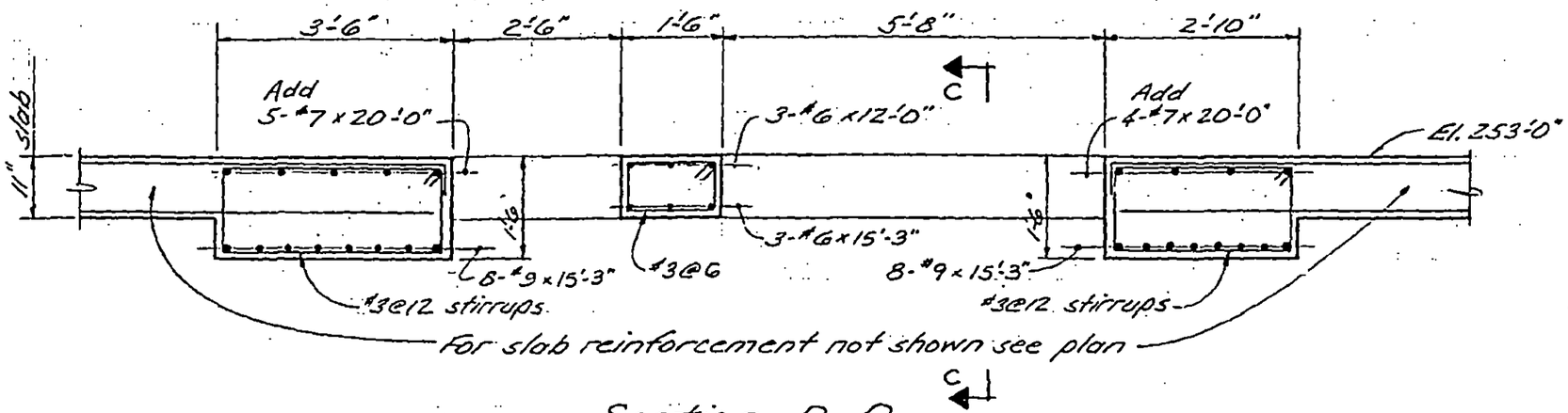

Section D-D
(SCJ-29)

LICENSED PROFESSIONAL ENGINEER
LESLIE E. ROBERTSON
No. 34380
UNIVERSITY OF THE STATE OF NEW YORK

DESIGNED
DRAWN S.C.
REVIEWED J.M. & E.L.

8-JKB-9.2

SKILLING, HELLE, CHRISTIANSEN, ROBERTSON — Structural & Civil Engineers

PROJECT: THE WORLD TRADE CENTER | TITLE: SECTIONS AT EL. 253'-0" | DATE: 1-16-69

REVISIONS

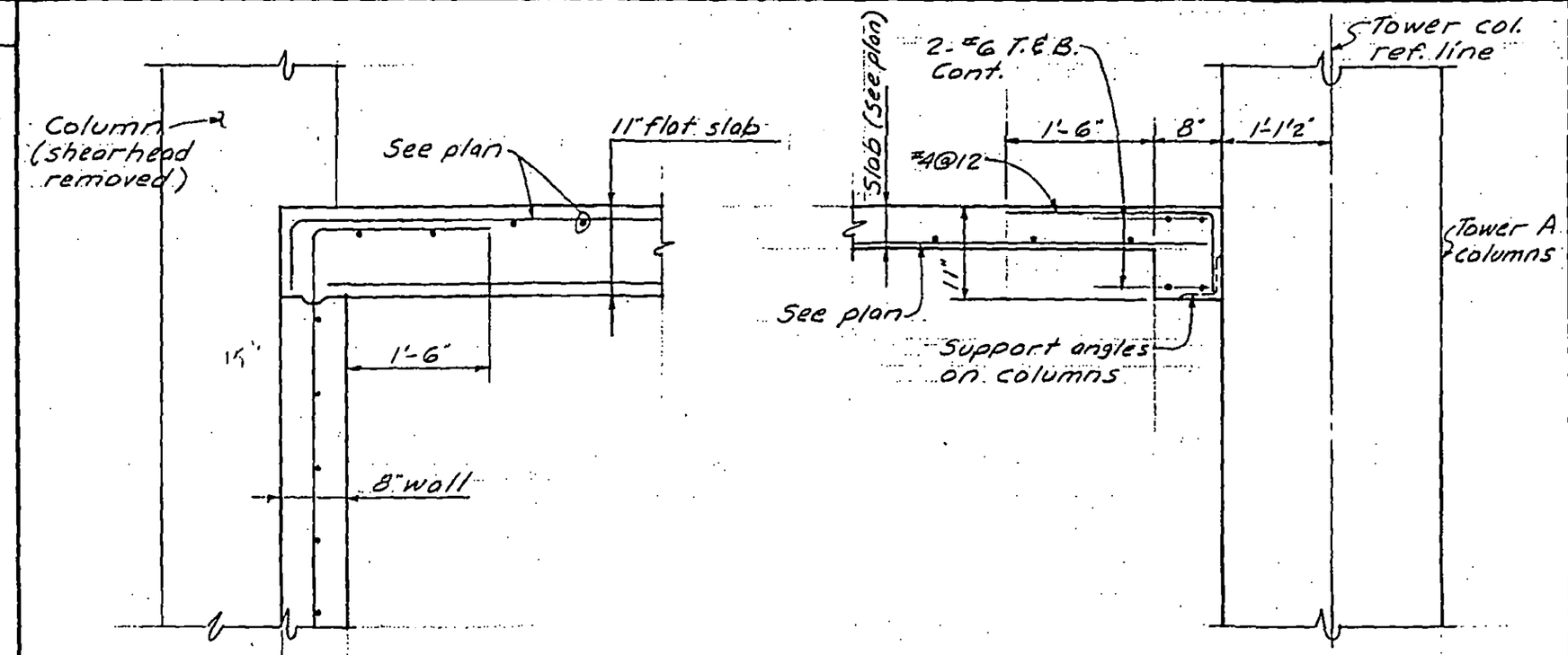

Section E-E

Section F-F

DESIGNED

DRAWN S.C.

REVIEWED

8-1K8-9.3

SKILLING, HELLE, CHRISTIANSEN, ROBERTSON — Structural & Civil Engineers

PROJECT THE WORLD TRADE CENTER | TITLE SECTIONS AT EL. 253'-0" | DATE 8-8-69

REVISIONS

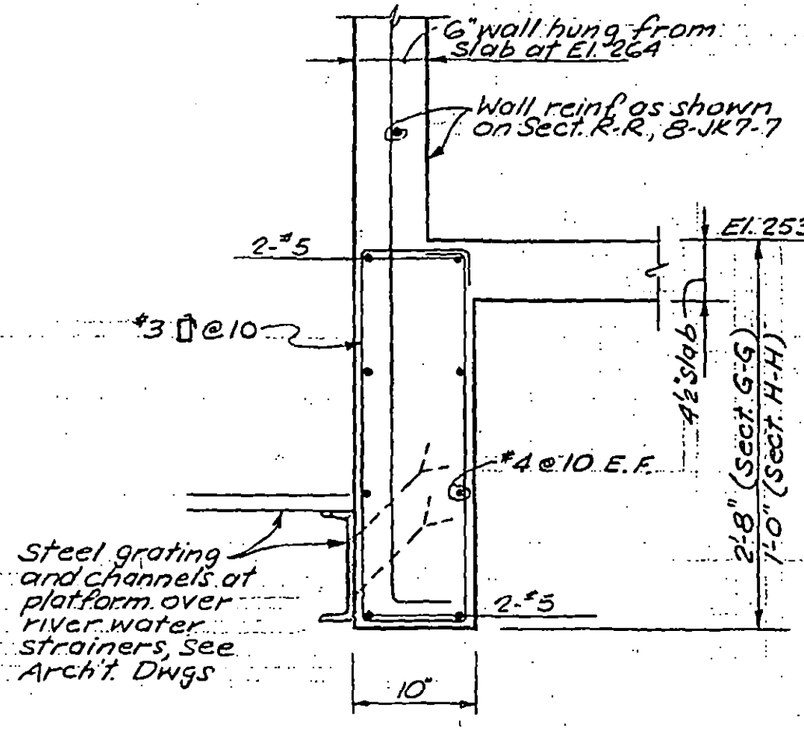

Section G-G

Section H-H

(1" = 1'-0")

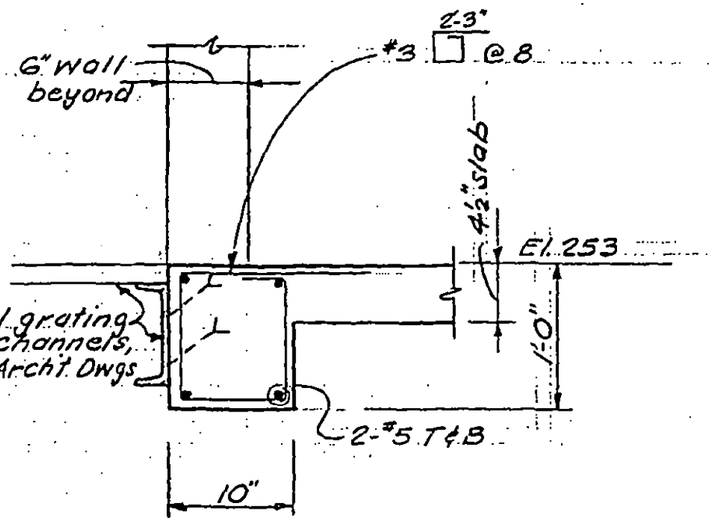

Section J-J

(1" = 1'-0")

LICENSED PROFESSIONAL ENGINEER — LESLIE E. ROBERTSON — No. 34360 — UNIVERSITY OF THE STATE OF NEW YORK

DESIGNED

DRAWN S.C.

REVIEWED

8-JK8-9.4

SKILLING - HELLE - CHRISTIANSEN - ROBERTSON Structural & Civil Engineers

PROJECT THE WORLD TRADE CENTER | TITLE REFRIGERATION MACHINE BASE - EL 257'-0" | DATE 5-1-68

REVISIONS

7-9-68
12-18-68
5-21-69
10-13-69

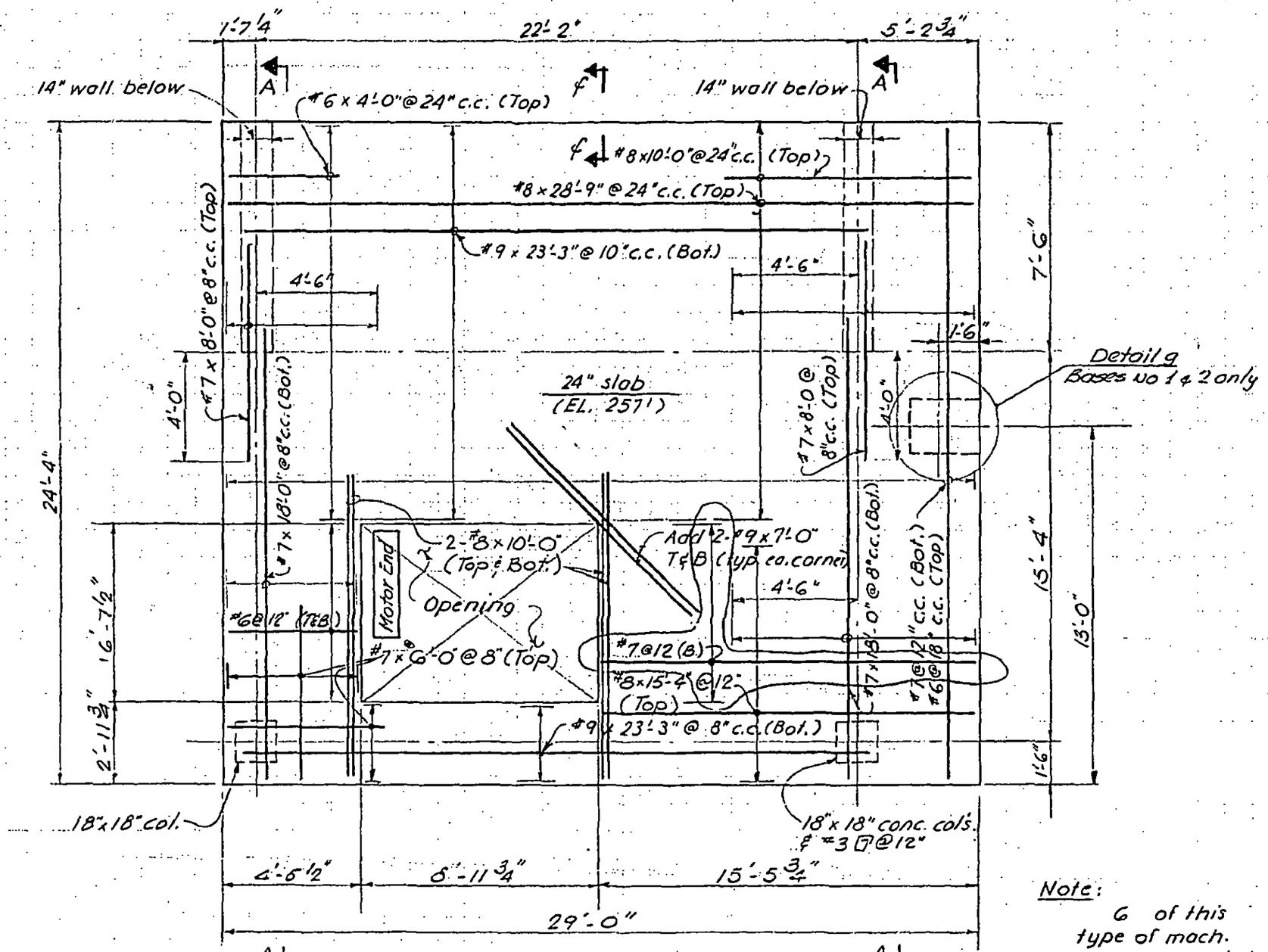

Note:
6 of this type of mach. bases are req'd.

Plan
Bases No. 1 thru 6

8-JK8-10.1

LICENSED PROFESSIONAL ENGINEER
LESLIE E. ROBERTSON
No. 34360
UNIVERSITY OF THE STATE OF NEW YORK

DRAWN S.C.
REVIEWED J.M. & E.L.

SKILLING, HELLE, CHRISTIANSEN, ROBERTSON — Structural & Civil Engineers

PROJECT: THE WORLD TRADE CENTER | TITLE: REFRIGERATION MACHINE BASE - El. 257'-0" | DATE: 7-9-68

REVISIONS

12-18-68

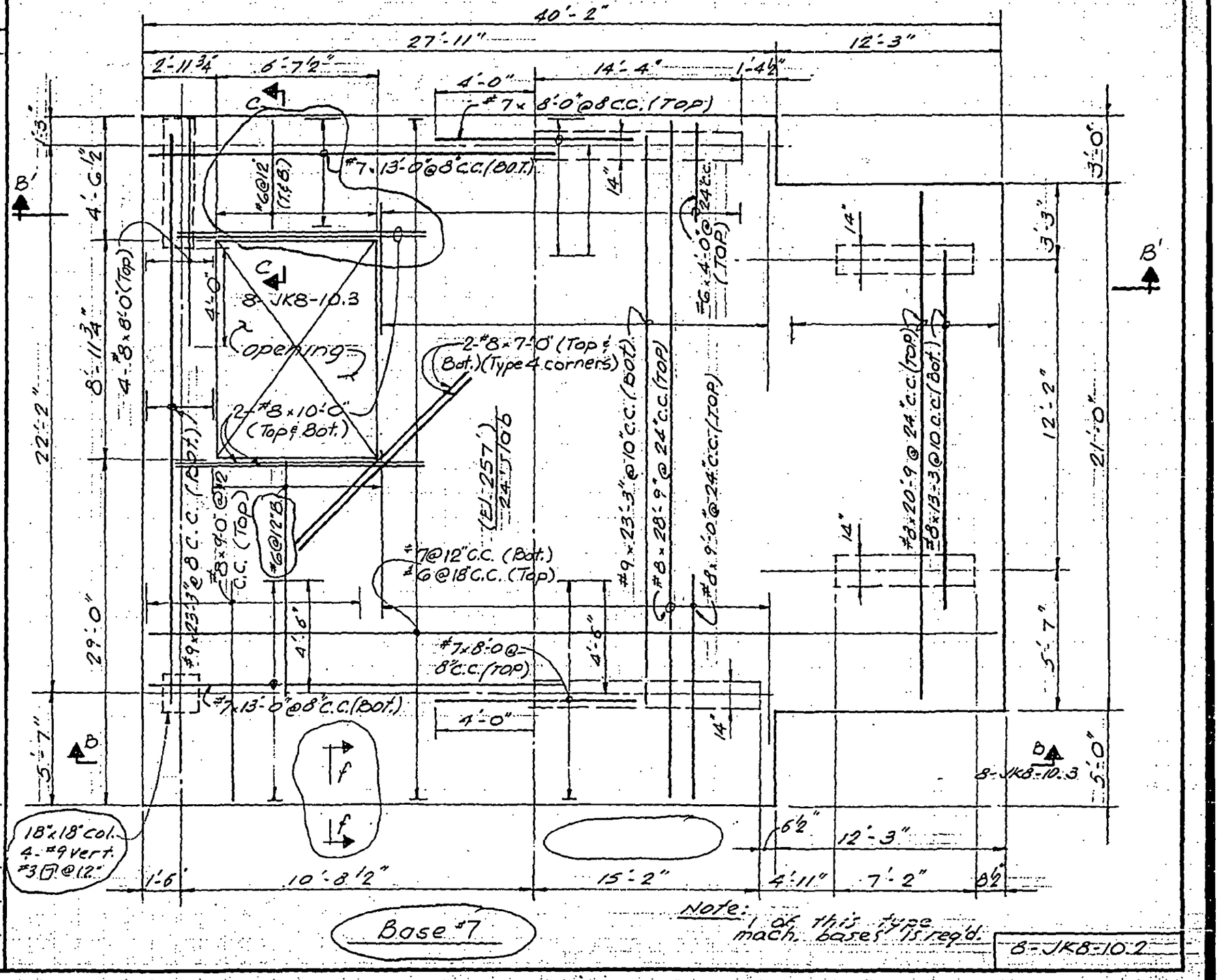

Base #7

Note: 1 of this type mach. bases is req'd.

8-JK8-10.2

DESIGNED

DRAWN: S.C.

REVIEWED: J.M. & E.L.

LICENSED PROFESSIONAL ENGINEER — LESLIE E. ROBERTSON — No. 34360 — UNIVERSITY OF THE STATE OF NEW YORK

SKILLING, HELLE, CHRISTIANSEN, ROBERTSON — Structural & Civil Engineers

PROJECT: THE WORLD TRADE CENTER | TITLE: REFRIGERATION MACHINE BASE-El. 257'-0" | DATE: 7-9-68

REVISIONS
12-18-68
5-21-69
9-15-69

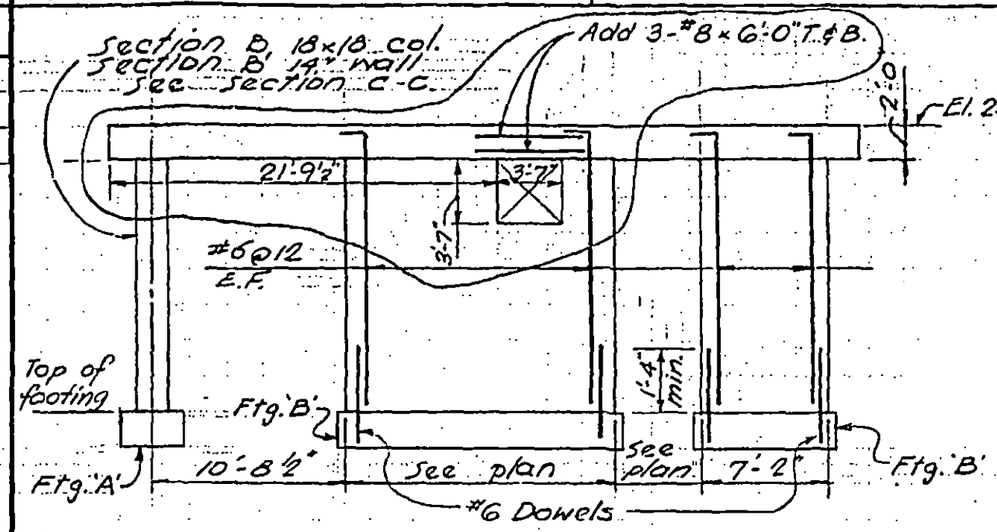

Section B-B
Section B'-B'

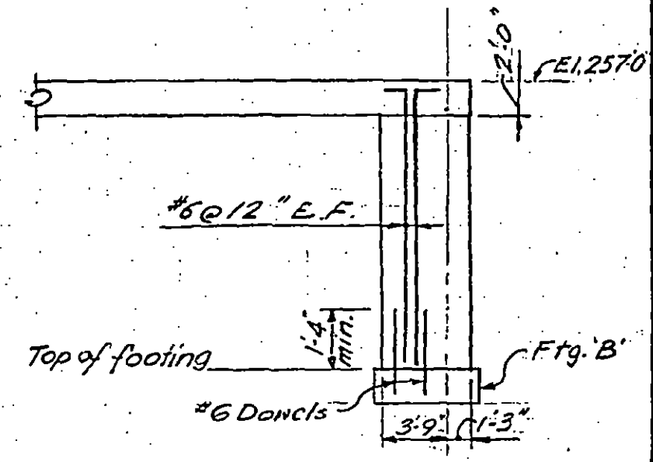

Section C-C

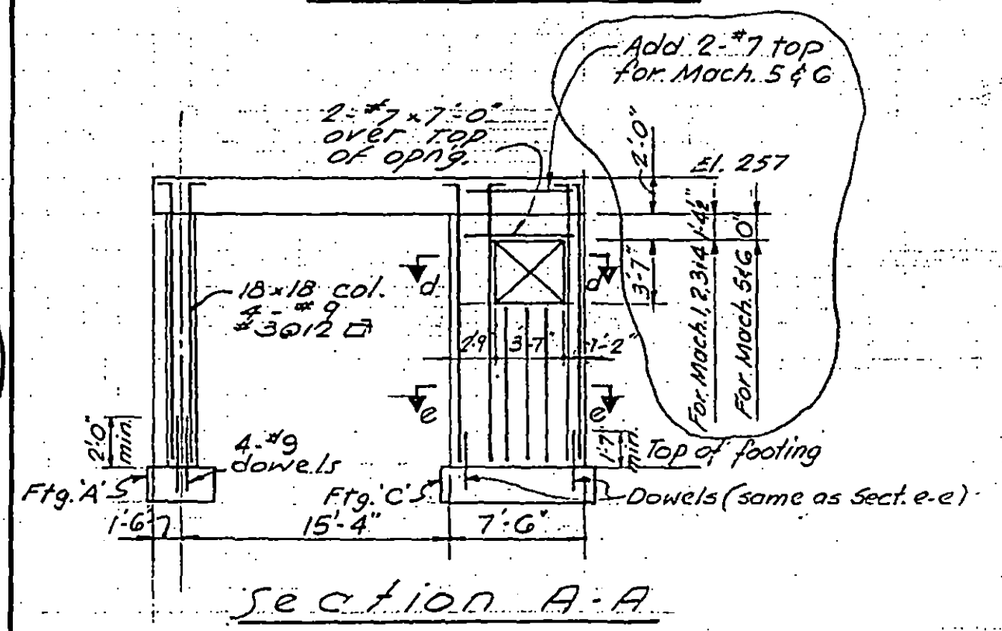

Section A-A

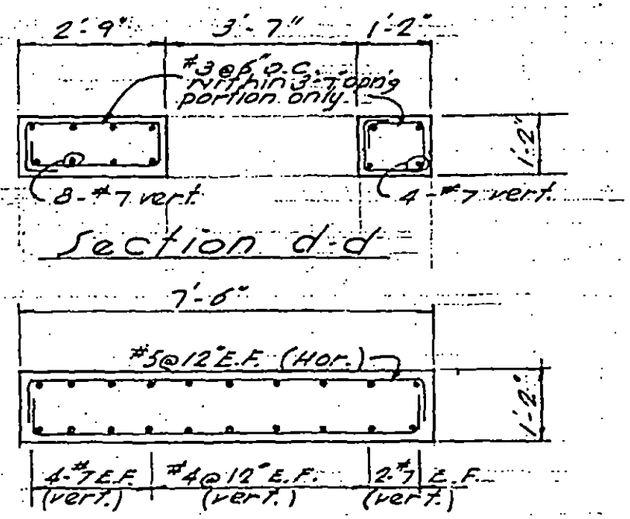

Section d-d

Section e-e

Note: See 8-JK8-10.4 for detail of footings.

DESIGNED
DRAWN S.C.
REVIEWED

8-JK8-10.3

SKILLING, HELLE, CHRISTIANSEN, ROBERTSON — Structural & Civil Engineers

PROJECT THE WORLD TRADE CENTER | TITLE REFRIGERATION MACHINE BASE - EL. 257'-0" | DATE 12-18-68

REVISIONS

5-21-69

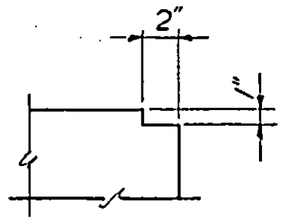

Section f-f

Typical around perimeter of machine bases

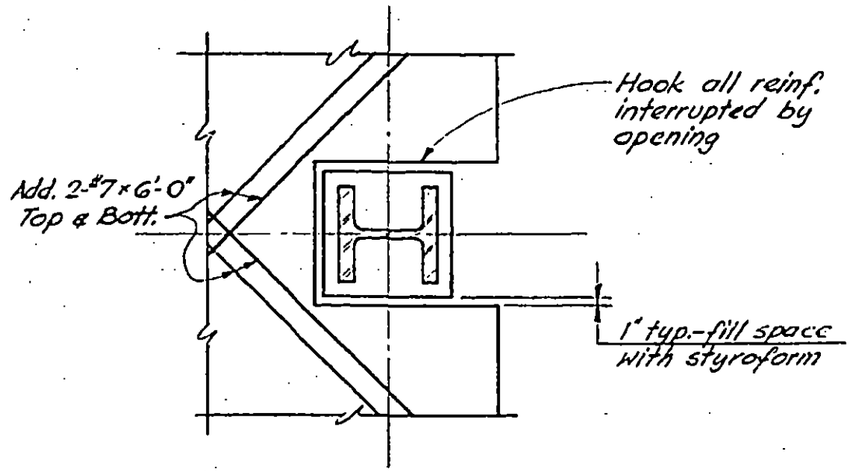

Detail 9

Bases No. 1 & 2 only

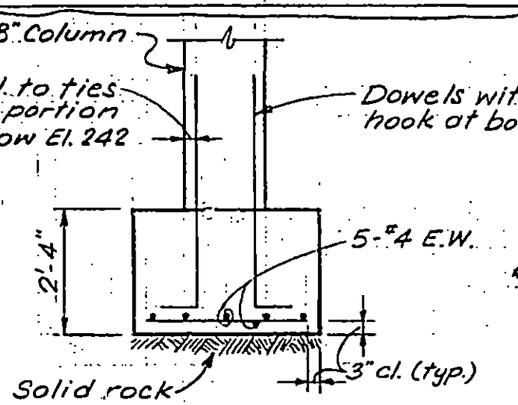

Section h-h

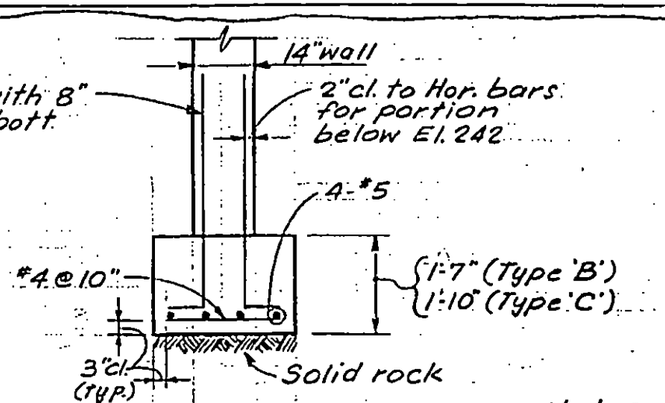

Section j-j

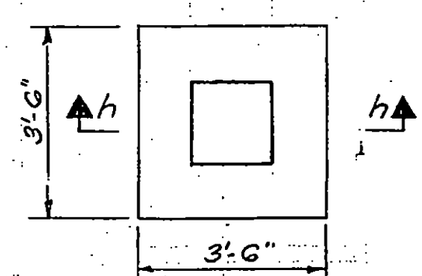

Footing 'A'

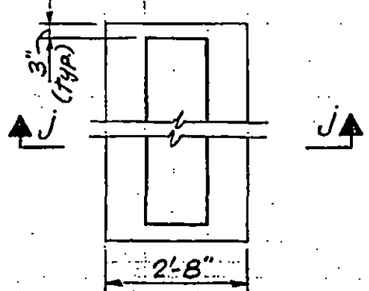

Footings 'B' & 'C'

Notes:

1. All concrete for footings shown to be f'c = 3000 psi.
2. All footings to rest on solid rock. Further cutting, if reqd to insure soundness of rock, as directed by the Engineer.

LICENSED PROFESSIONAL ENGINEER — LESLIE E. ROBERTSON — No. 34360 — UNIVERSITY OF THE STATE OF NEW YORK

DESIGNED

DRAWN S.C.

REVIEWED J.M. & E.L.

8-JK8-10.4

SKILLING, HELLE, CHRISTIANSEN, ROBERTSON — Structural & Civil Engineers

PROJECT THE WORLD TRADE CENTER | TITLE CABLE VAULT NO. 1 | DATE 5-1-68

REVISIONS

3-25-70 GEN REV.

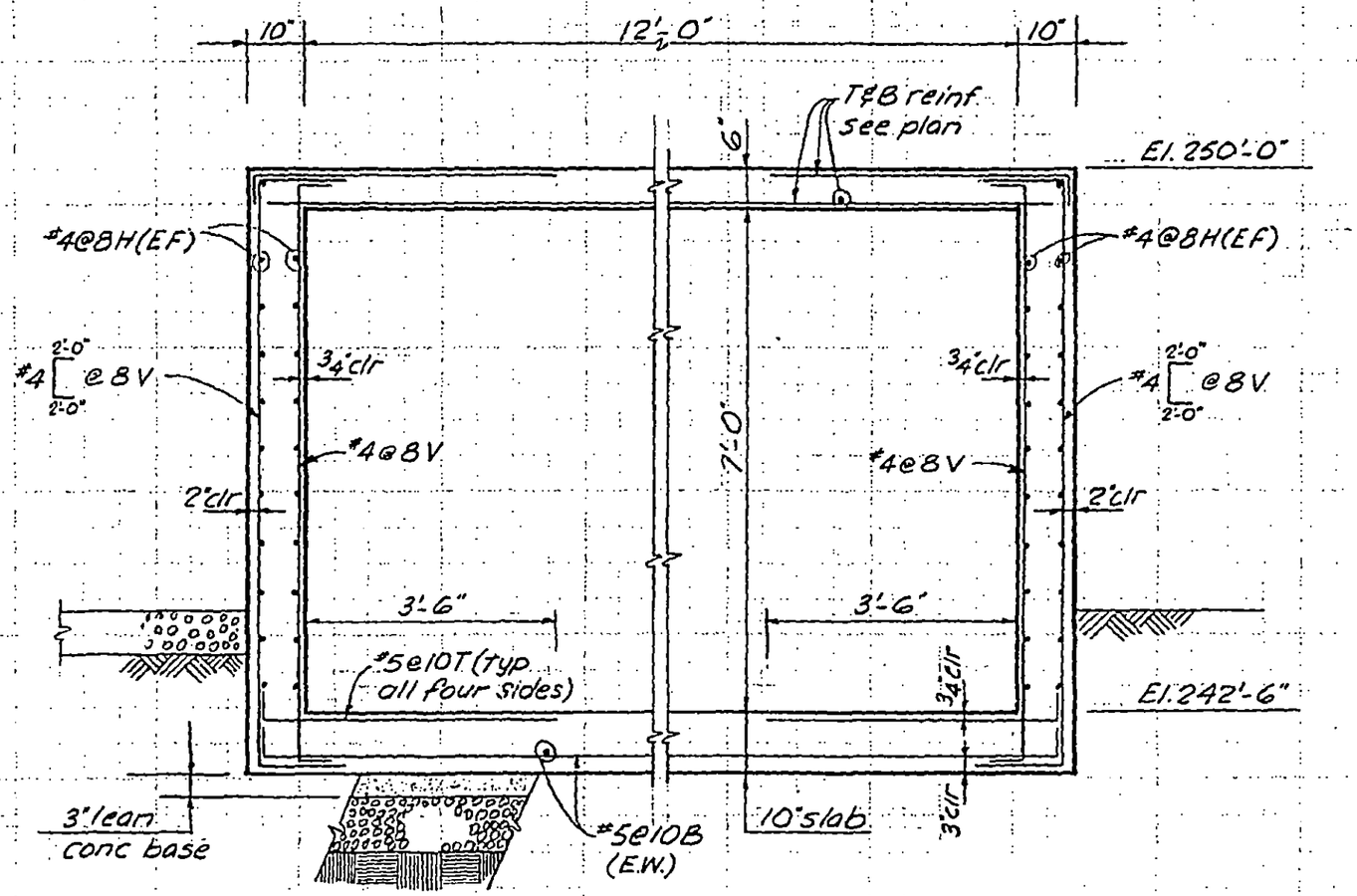

Notes:

1. Wall reinf. shown is typical on all four sides.
2. Concrete: $f'_c = 3000$ psi

(1/2"=1'-0")

8-JKB-12.1

LICENSED PROFESSIONAL ENGINEER — LESLIE E. ROBERTSON — No. 34360 — UNIVERSITY OF THE STATE OF NEW YORK

DESIGNED

DRAWN A.F.

REVIEWED E.L.

SKILLING, HELLE, CHRISTIANSEN, ROBERTSON — Structural & Civil Engineers

PROJECT THE WORLD TRADE CENTER | TITLE CABLE VAULT N° 2 | DATE 5-1-68

REVISIONS

3-13-70 GEN. REV.

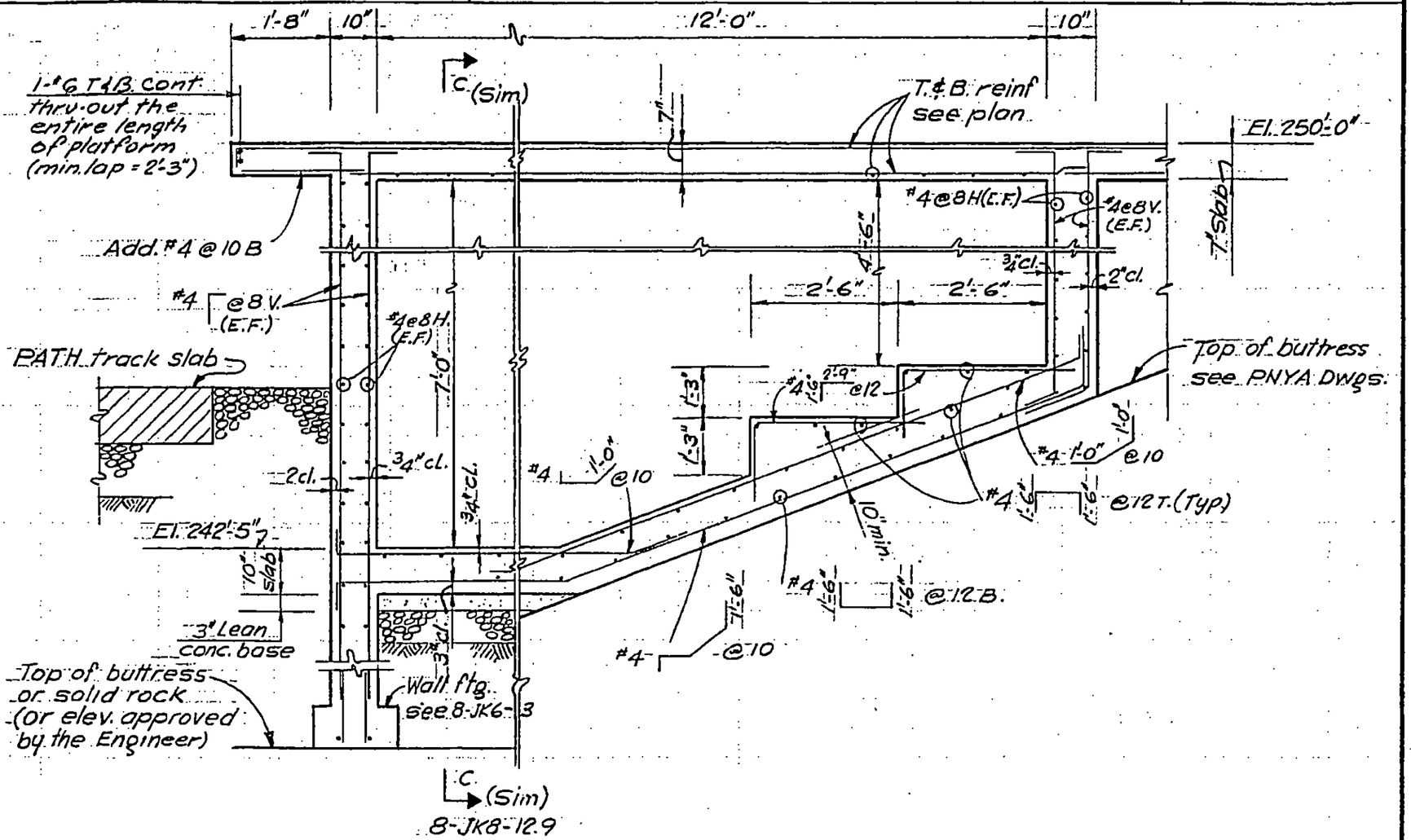

LICENSED PROFESSIONAL ENGINEER LESLIE E. ROBERTSON No. 34360 UNIVERSITY OF THE STATE OF NEW YORK

DESIGNED

DRAWN V.H.A

REVIEWED K.H. & E.L.

8-JK8-12.2

SKILLING, HELLE, CHRISTIANSEN, ROBERTSON — Structural & Civil Engineers

PROJECT: THE WORLD TRADE CENTER | TITLE: CABLE VAULT No. 3 | DATE: 5-1-68

REVISIONS

3-4-70 GEN. REV.

3-12-70

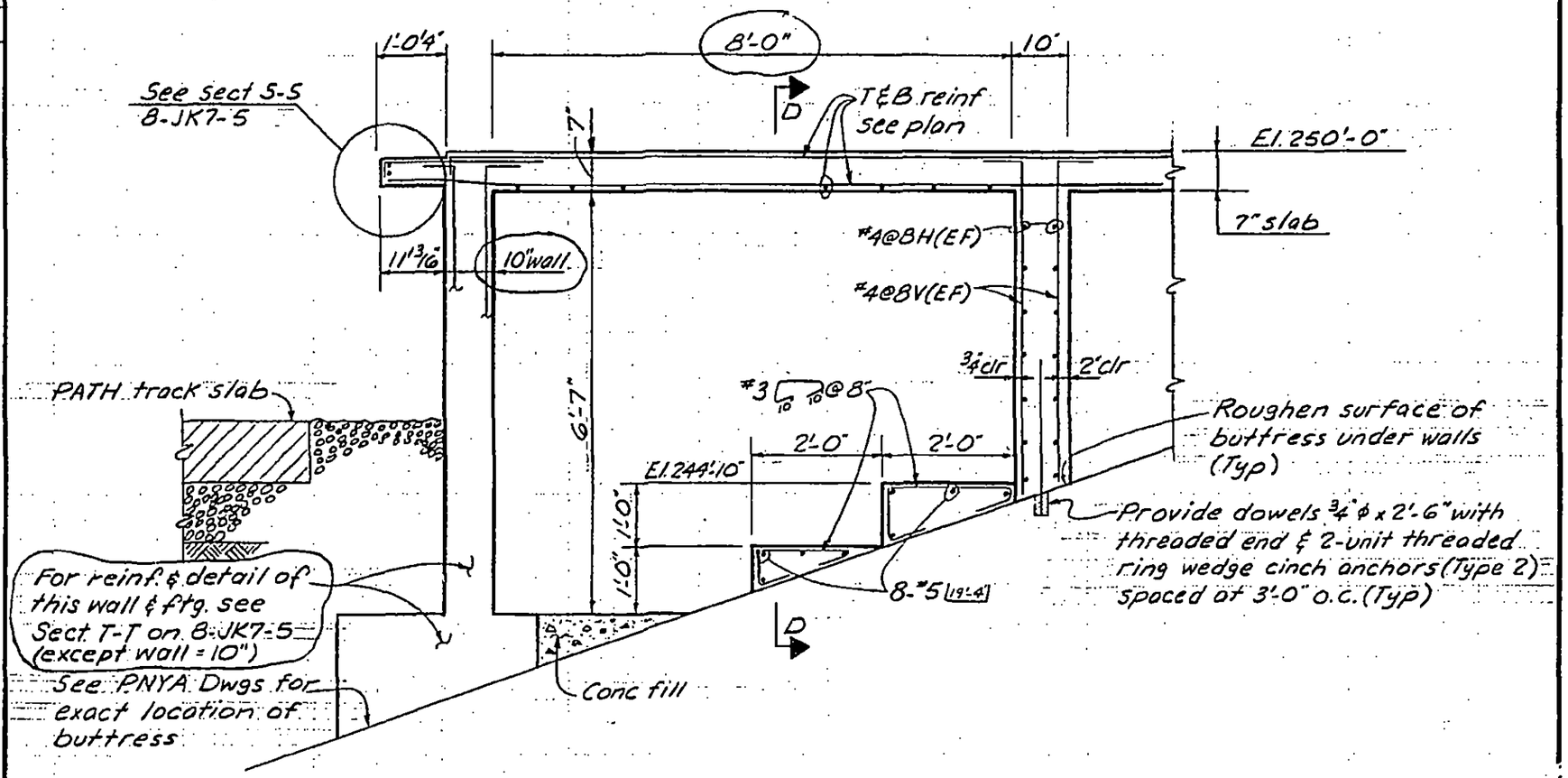

LICENSED PROFESSIONAL ENGINEER — LESLIE E. ROBERTSON — No 34360 — UNIVERSITY OF THE STATE OF NEW YORK

DESIGNED: K.H

DRAWN: A.L.F.

REVIEWED: E.L.

(½" = 1'-0")

8-JK8-12.3

SKILLING, HELLE, CHRISTIANSEN, ROBERTSON — Structural & Civil Engineers

PROJECT: THE WORLD TRADE CENTER | TITLE: CABLE VAULT No. 4 | DATE: 5-1-68

REVISIONS

12-22-69 GEN. REV.

3-12-70

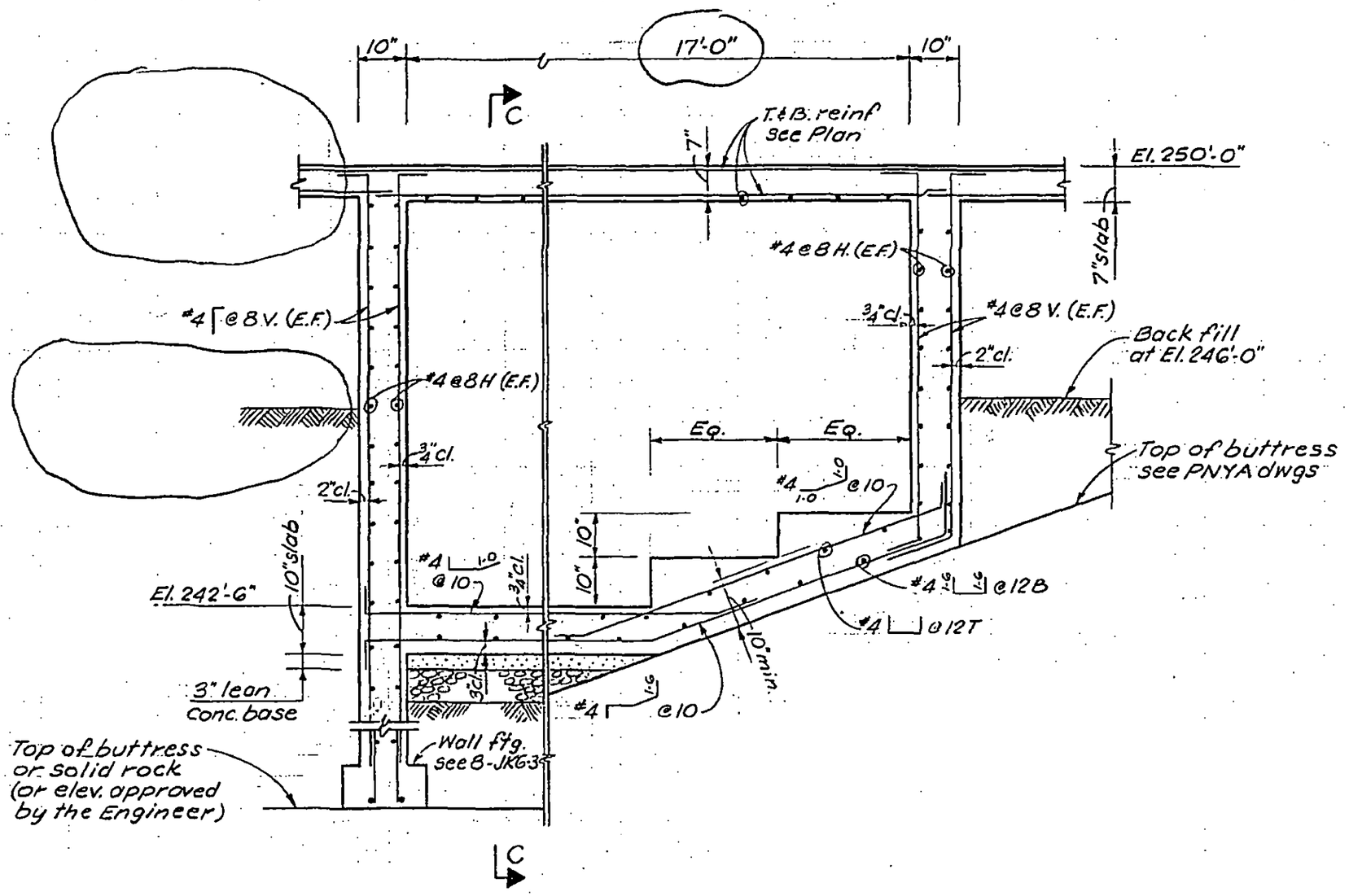

LICENSED PROFESSIONAL ENGINEER — LESLIE E. ROBERTSON — No 34360 — UNIVERSITY OF THE STATE OF NEW YORK

DESIGNED

DRAWN: S.C.

REVIEWED: E.L.

B-JKB-12.4

SKILLING, HELLE, CHRISTIANSEN, ROBERTSON — Structural & Civil Engineers

PROJECT THE WORLD TRADE CENTER | TITLE CABLE VAULT No: 5A AND No: 5B | DATE 5-1-68

REVISIONS

10-24-69 GEN REV.

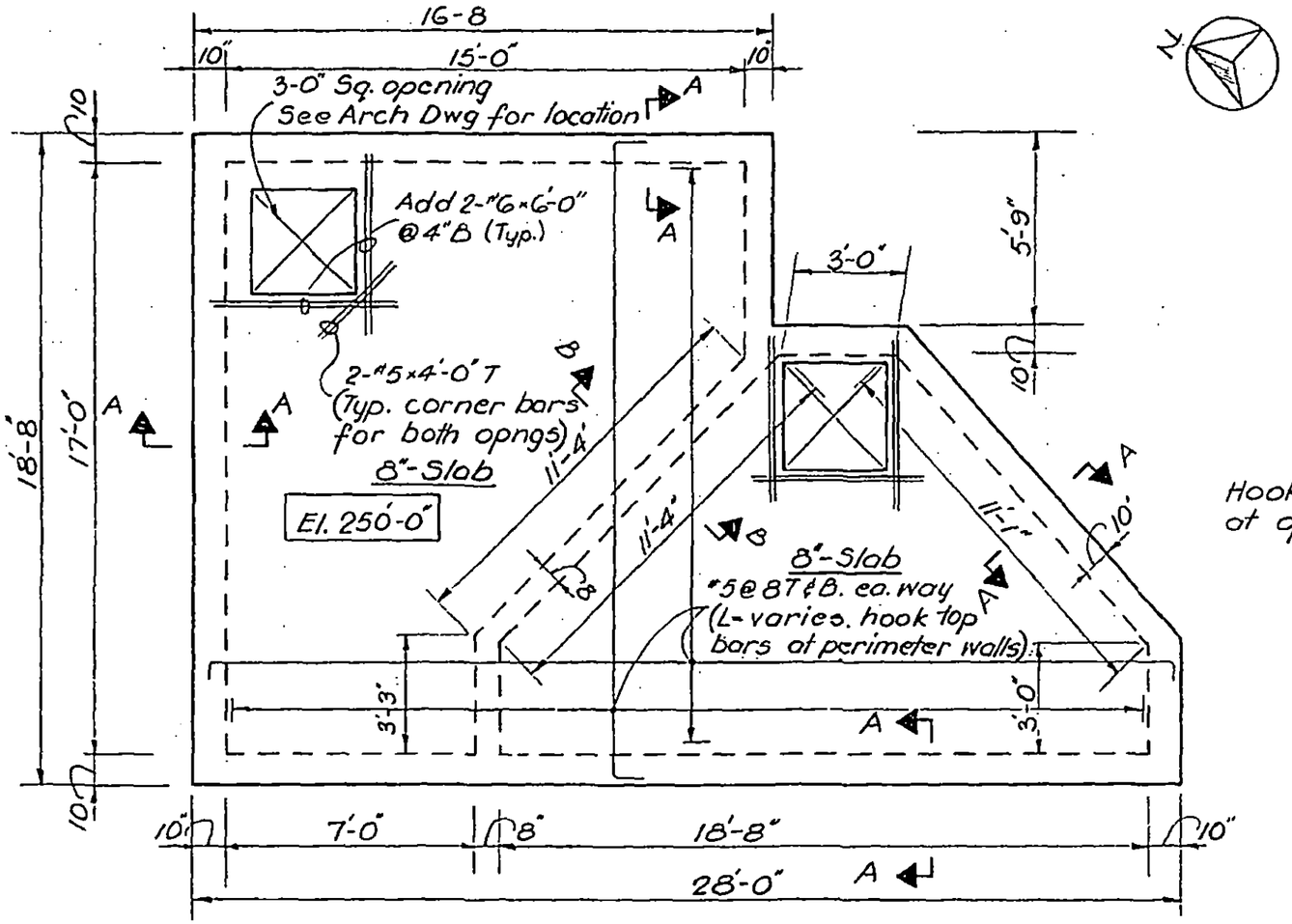

Hook all bars at oprngs.

LICENSED PROFESSIONAL ENGINEER
LESLIE E. ROBERTSON
No. 34360
UNIVERSITY OF THE STATE OF NEW YORK

DESIGNED

DRAWN D.C. Huggins

REVIEWED F I

8-JK8-12.5

SKILLING, HELLE, CHRISTIANSEN, ROBERTSON — Structural & Civil Engineers

PROJECT THE WORLD TRADE CENTER | TITLE CABLE VAULT No: G | DATE 5-1-68.

REVISIONS

GEN 10-24-69 REV

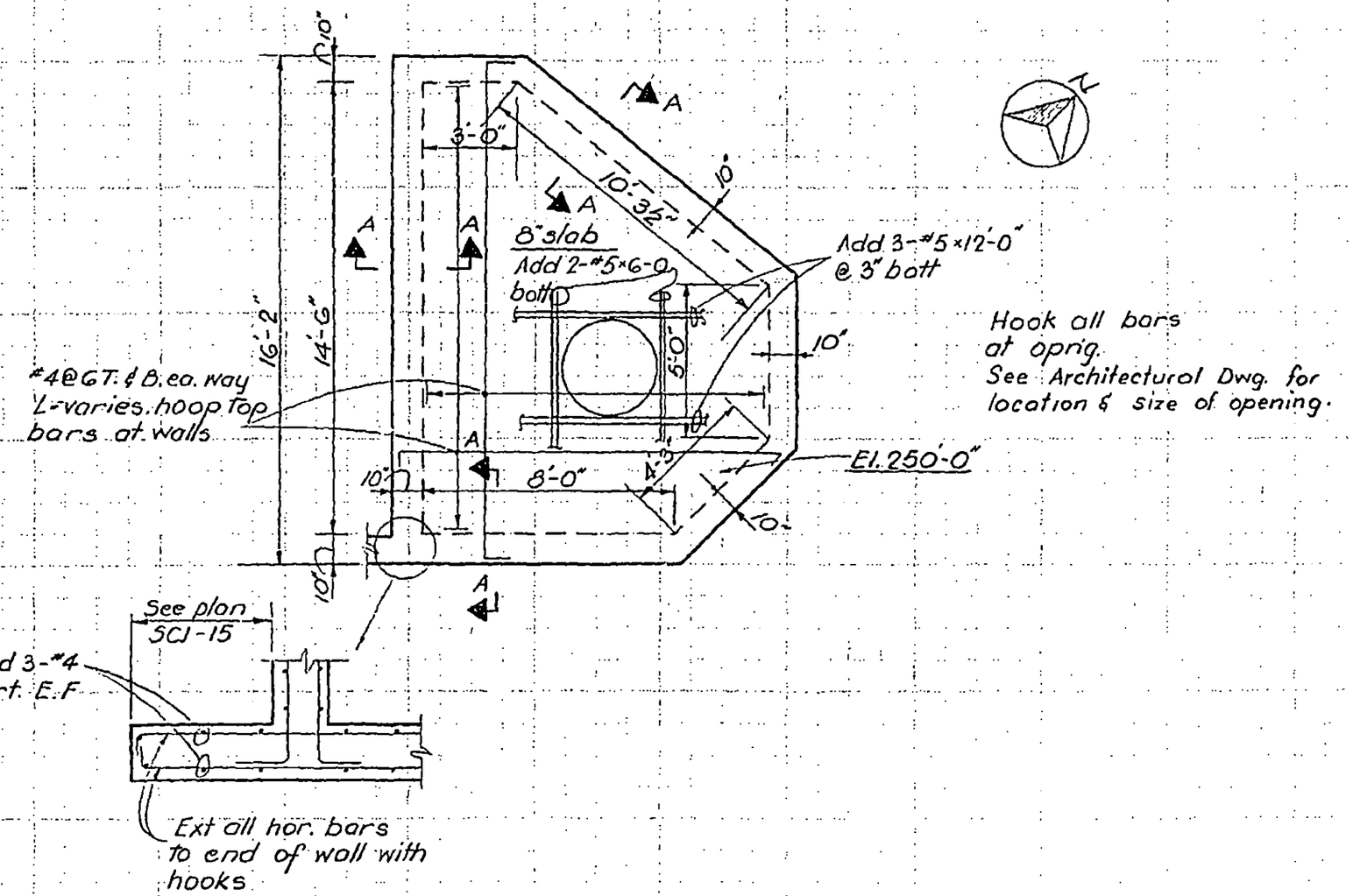

LICENSED PROFESSIONAL ENGINEER — LESLIE E. ROBERTSON — No. 34360 — UNIVERSITY OF THE STATE OF NEW YORK

DESIGNED

DRAWN D.C. Huggins

REVIEWED E.L.

8-JK8-12.6

SKILLING, HELLE, CHRISTIANSEN, ROBERTSON — Structural & Civil Engineers

PROJECT: THE WORLD TRADE CENTRE | TITLE: CABLE VAULT No: 7 | DATE: 5-1-68

REVISIONS

10-24-69 GEN. REV.

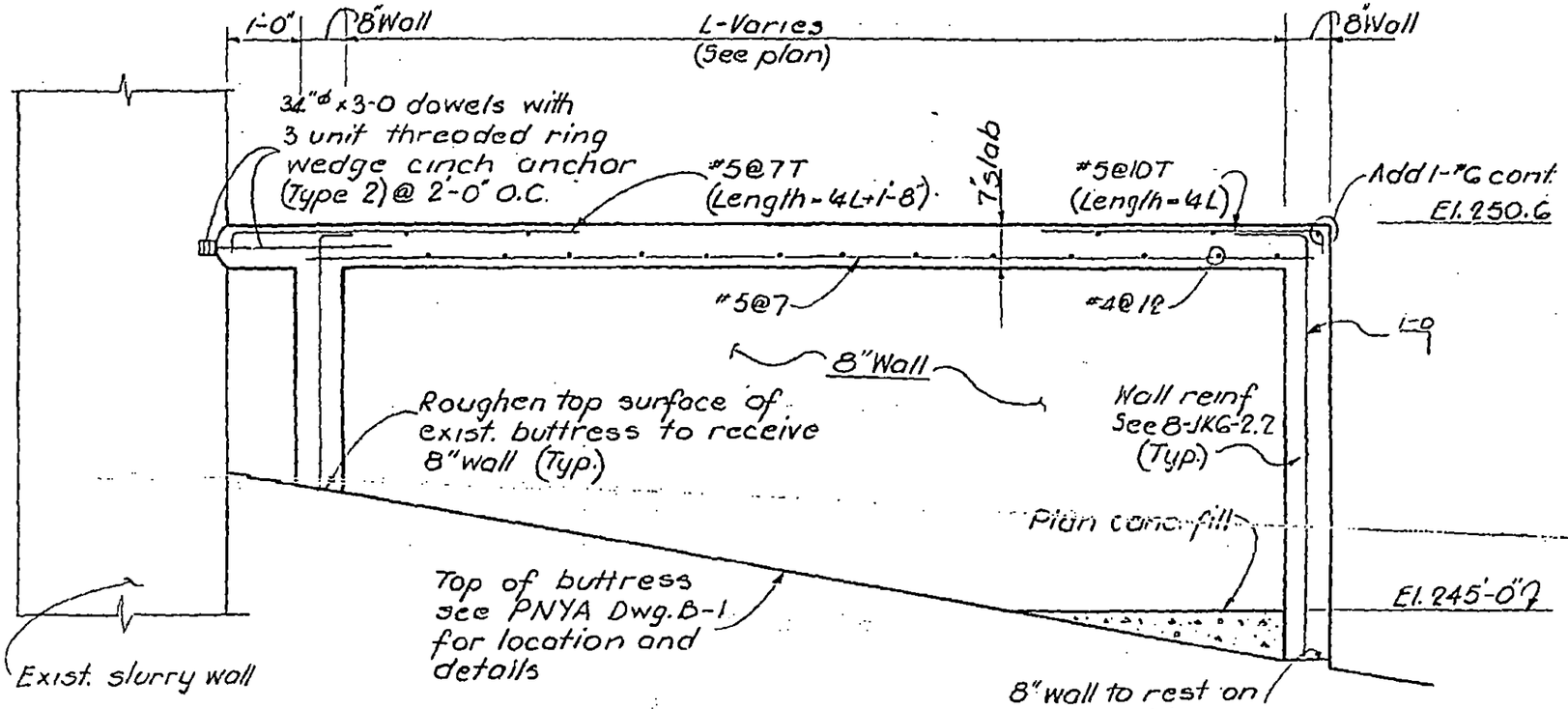

LICENSED PROFESSIONAL ENGINEER
LESLIE E. ROBERTSON
No. 34360
UNIVERSITY OF THE STATE OF NEW YORK

DESIGNED

DRAWN
D.C. Huggins

REVIEWED
E.L.

8-JK8-12.7

SKILLING, HELLE, CHRISTIANSEN, ROBERTSON — Structural & Civil Engineers

PROJECT THE WORLD TRADE CENTER | TITLE CABLE VAULT DETAILS | DATE 10-24-69

REVISIONS

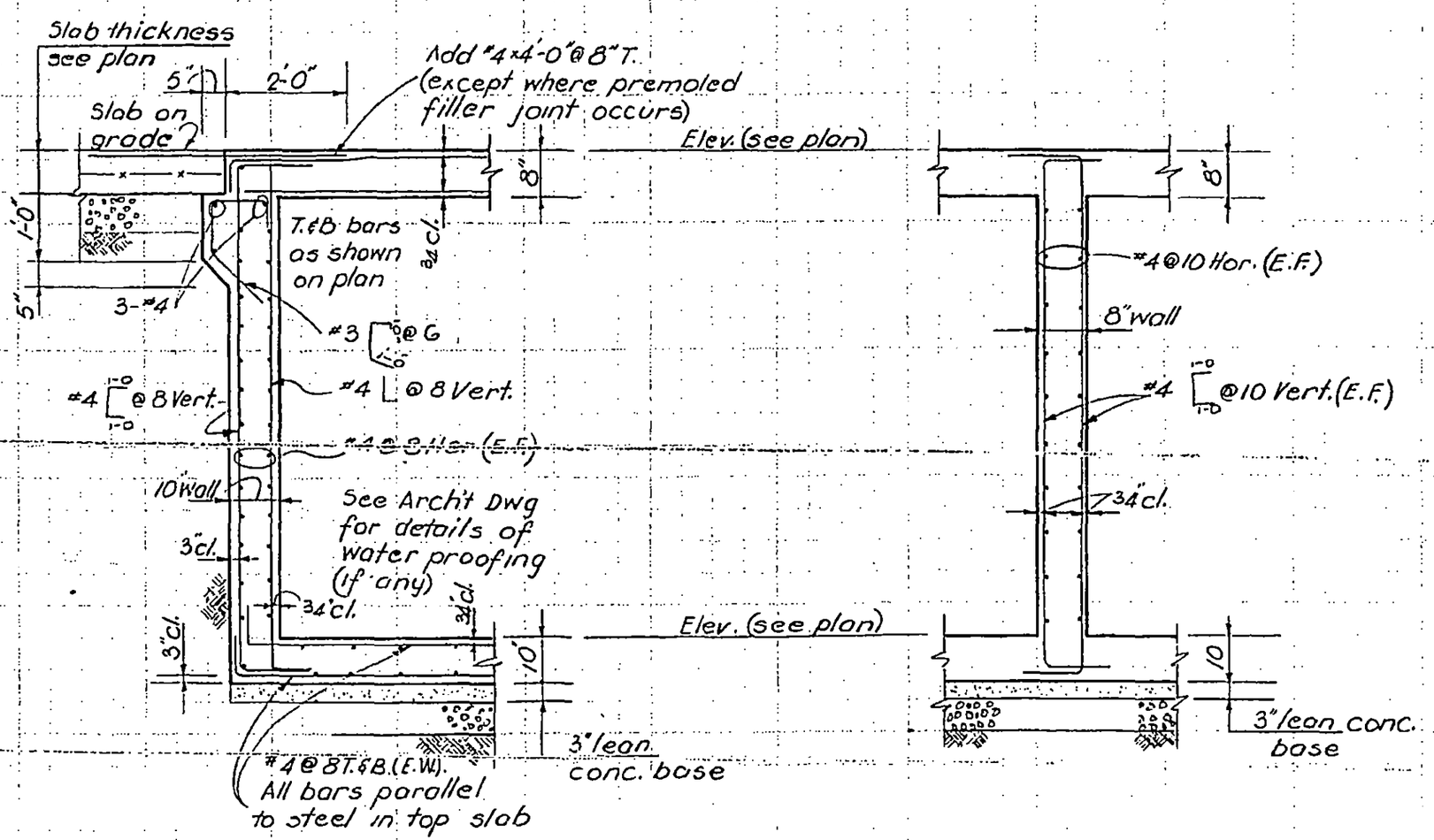

SECTION A-A
(½"=1'-0")

SECTION B-B
(½"=1'-0")

LICENSED PROFESSIONAL ENGINEER — LESLIE E. ROBERTSON — No. 34360 — UNIVERSITY OF THE STATE OF NEW YORK

DESIGNED

DRAWN D.C.Huggins

REVIEWED E.L.

8-JK8-12.8

SKILLING, HELLE, CHRISTIANSEN, ROBERTSON — Structural & Civil Engineers

PROJECT THE WORLD TRADE CENTER | TITLE CABLE VAULT DETAILS | DATE 12-22-69

REVISIONS

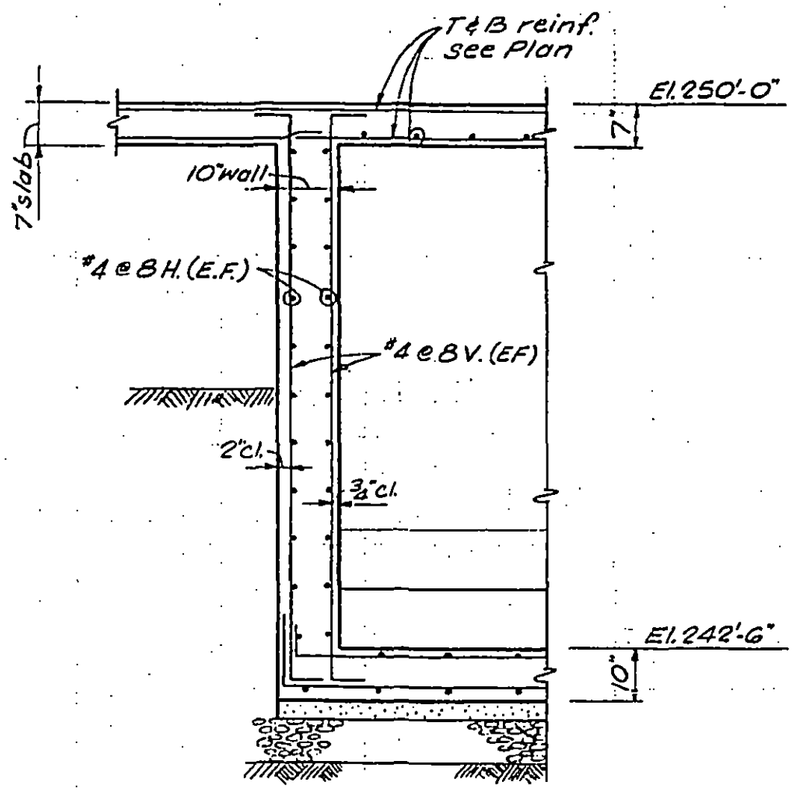

Section C-C
(½" = 1'-0")

LICENSED PROFESSIONAL ENGINEER
LESLIE E. ROBERTSON
No. 34360
UNIVERSITY OF THE STATE OF NEW YORK

DESIGNED

DRAWN S.C.

REVIEWED E.L.

8-JK8-12.9

SKILLING, HELLE, CHRISTIANSEN, ROBERTSON — Structural & Civil Engineers

PROJECT: THE WORLD TRADE CENTER | TITLE: CABLE VAULT DETAILS | DATE: 3-4-70

REVISIONS

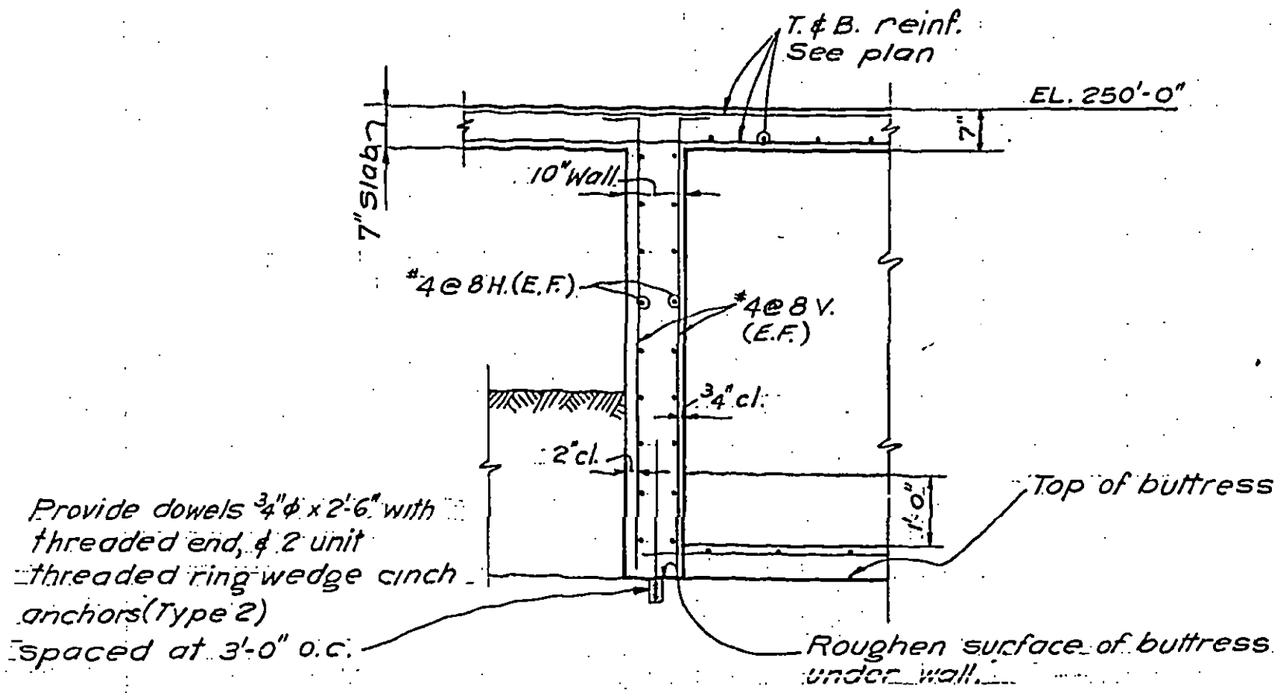

Section D-D
(1/2" = 1'-0")

LICENSED PROFESSIONAL ENGINEER — LESLIE E. ROBERTSON — No. 34360 — UNIVERSITY OF THE STATE OF NEW YORK

DESIGNED: K.H.
DRAWN: V.H.A
REVIEWED: E.L.

8-JK8-12.10

SKILLING, HELLE, CHRISTIANSEN, ROBERTSON — Structural & Civil Engineers

PROJECT THE WORLD TRADE CENTER | TITLE SECTIONS | DATE 10-24-69

REVISIONS

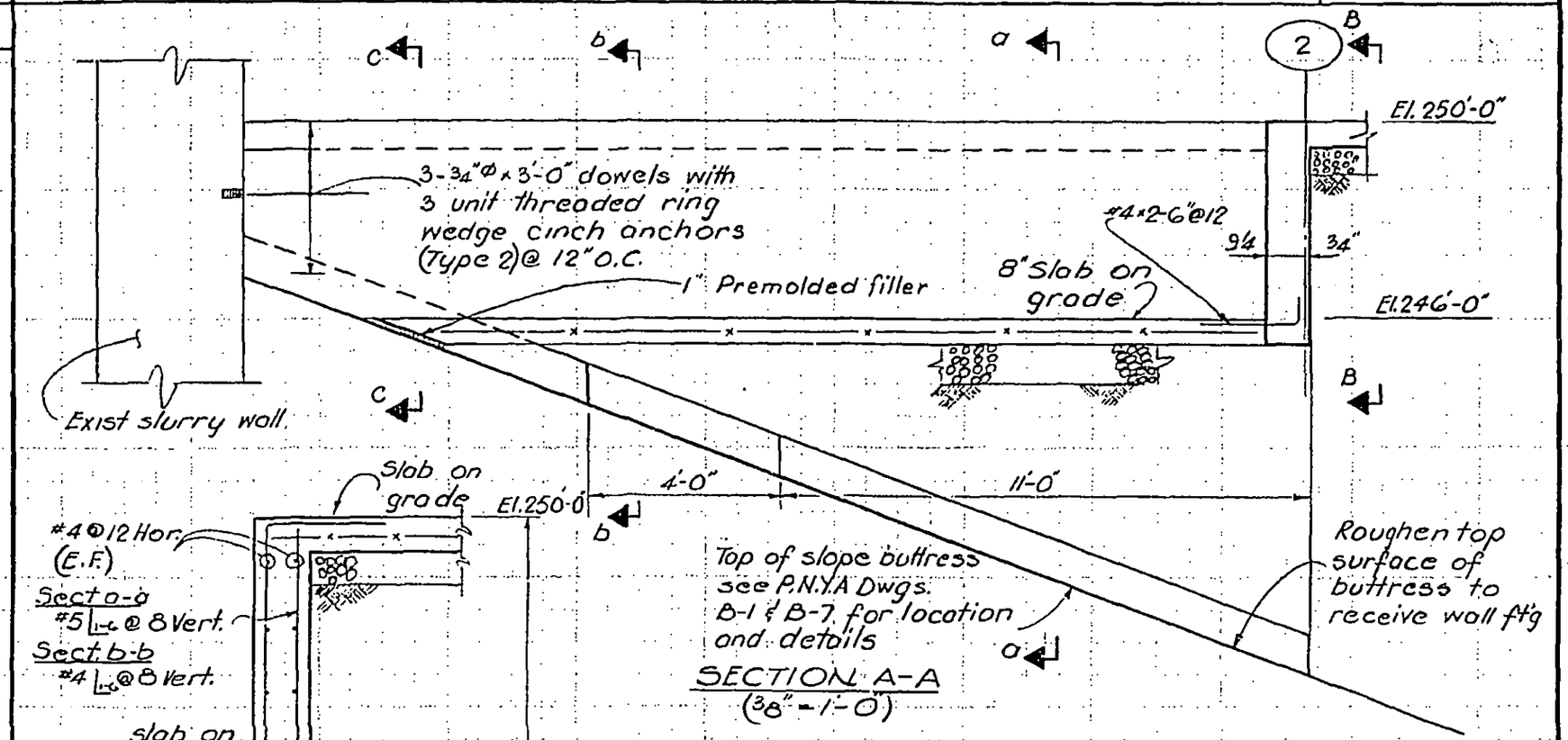

LICENSED PROFESSIONAL ENGINEER — LESLIE E. ROBERTSON — No. 34360 — UNIVERSITY OF THE STATE OF NEW YORK

DESIGNED

DRAWN D.C. Huggins

REVIEWED E.L.

8-JK8-13.1

SKILLING, HELLE, CHRISTIANSEN, ROBERTSON — Structural & Civil Engineers

PROJECT THE WORLD TRADE CENTER | TITLE SECTIONS | DATE 10-24-69

REVISIONS

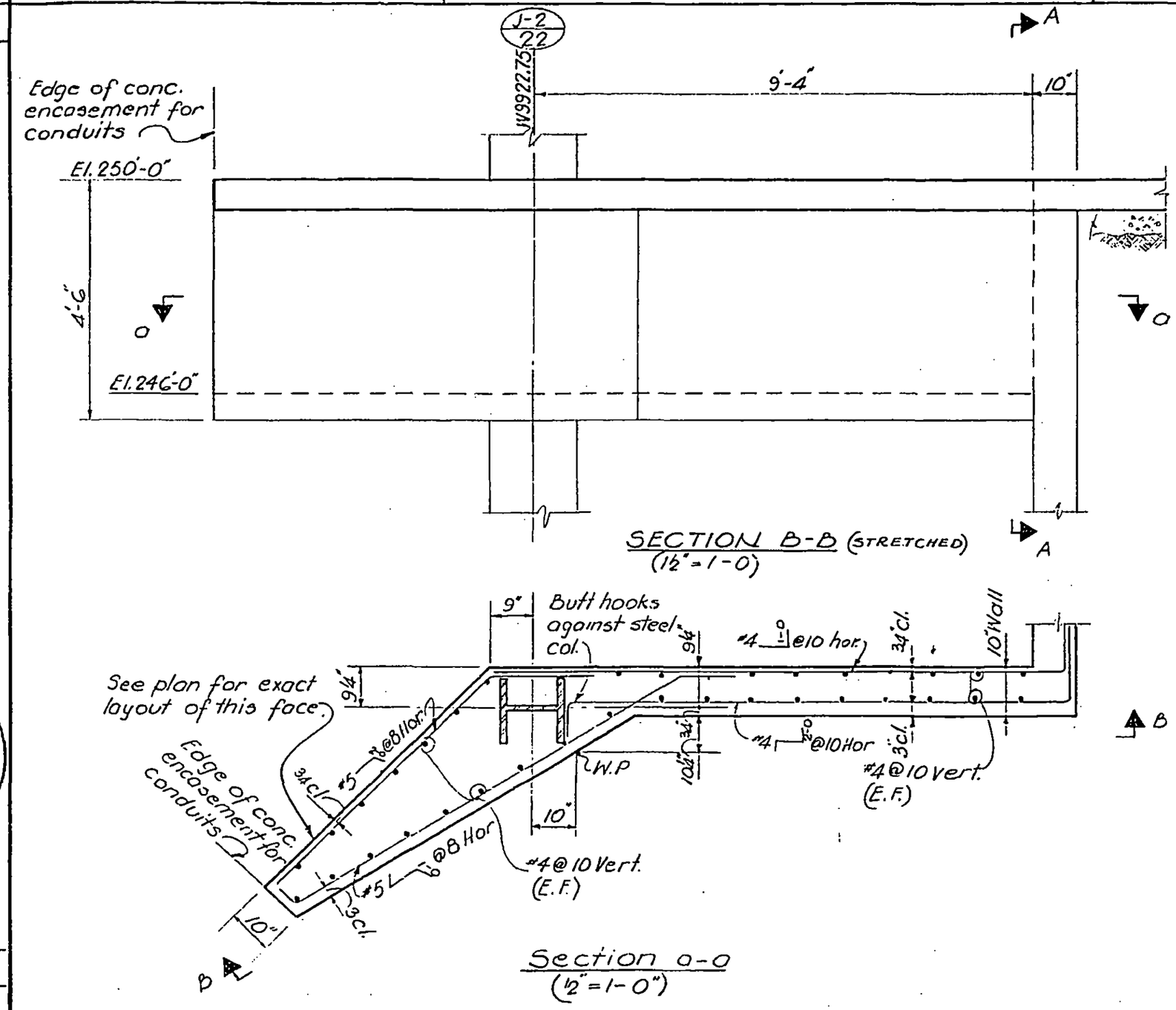

SECTION B-B (STRETCHED)
(1½" = 1'-0")

Section o-o
(½" = 1'-0")

DESIGNED

DRAWN
D.C. Huggins.

REVIEWED
E.L.

LICENSED PROFESSIONAL ENGINEER
LESLIE E. ROBERTSON
No. 34360
UNIVERSITY OF THE STATE OF NEW YORK

8-JK8-13.2

SKILLING, HELLE, CHRISTIANSEN, ROBERTSON — Structural & Civil Engineers

PROJECT THE WORLD TRADE CENTER | TITLE SECTIONS | DATE 10-24-69

REVISIONS
11-7-69
12-10-69

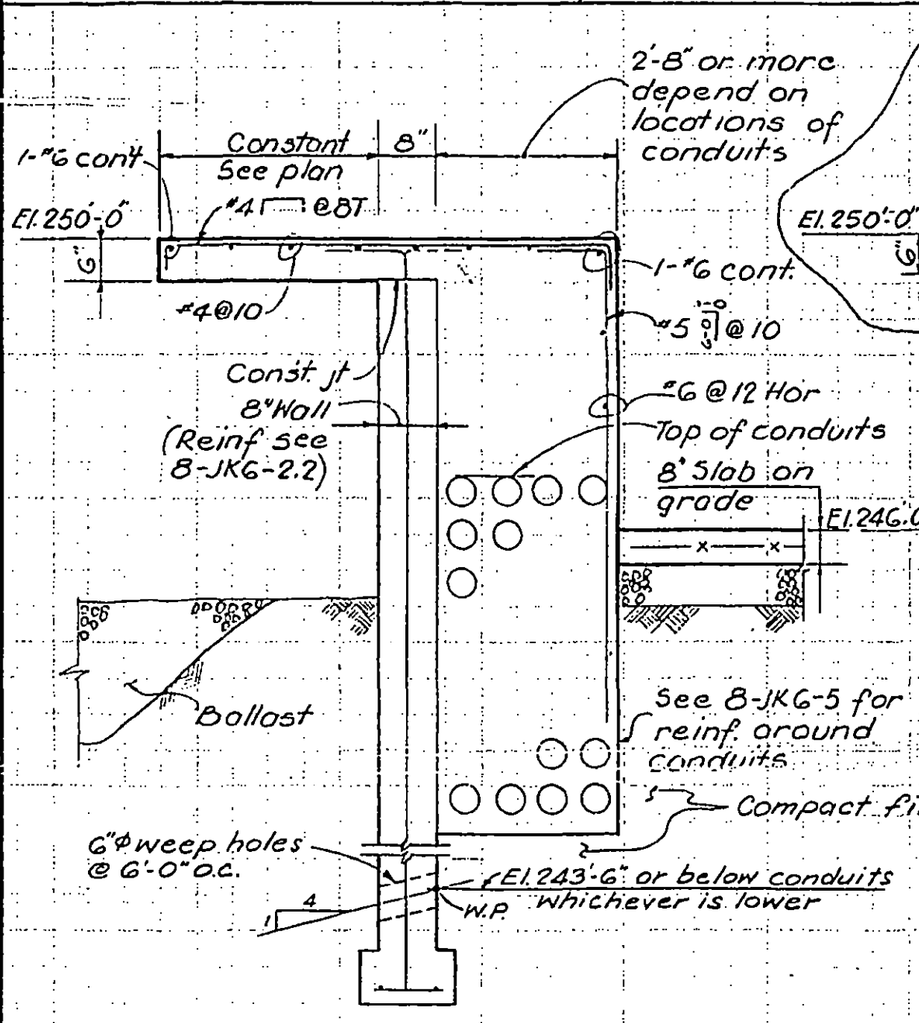

SECTION C-C
(½" = 1'-0")

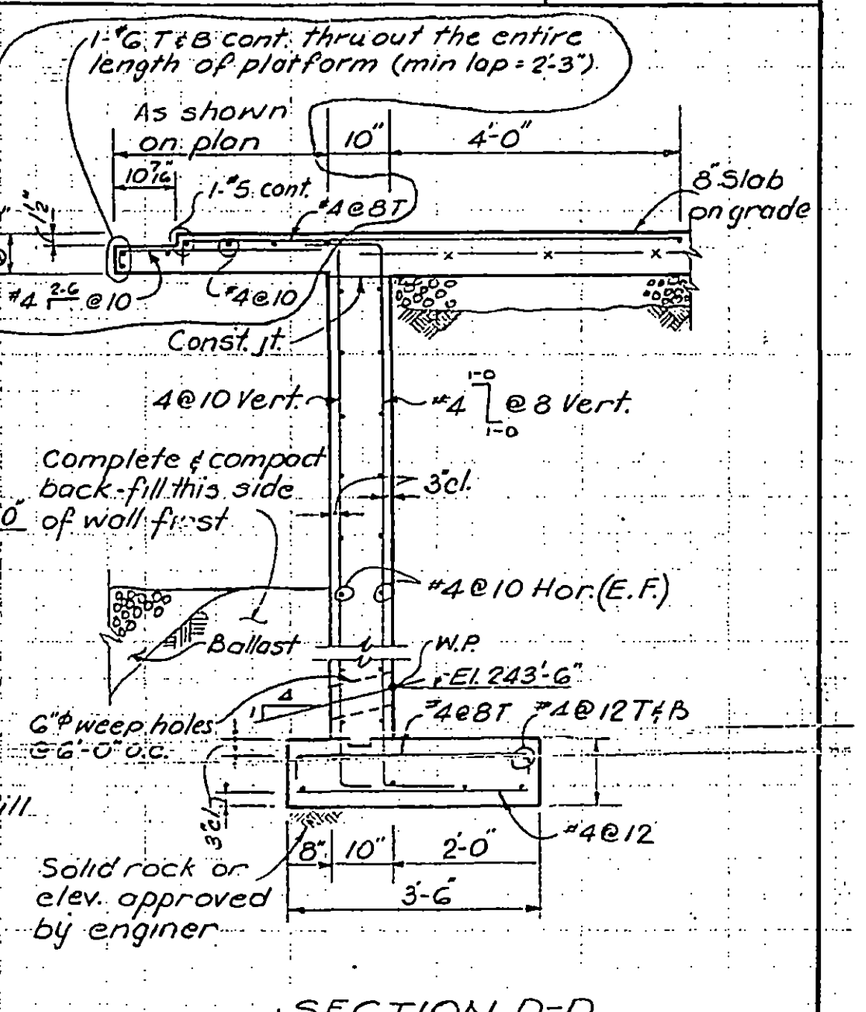

SECTION D-D
(½" = 1'-0")

LICENSED PROFESSIONAL ENGINEER
LESLIE E. ROBERTSON
No. 34360
UNIVERSITY OF THE STATE OF NEW YORK

DESIGNED
DRAWN D.C. Huggins
REVIEWED E.L

8-JK8-13.3

SKILLING, HELLE, CHRISTIANSEN, ROBERTSON — Structural & Civil Engineers

PROJECT THE WORLD TRADE CENTER | TITLE SECTIONS | DATE 10-24-69

REVISIONS

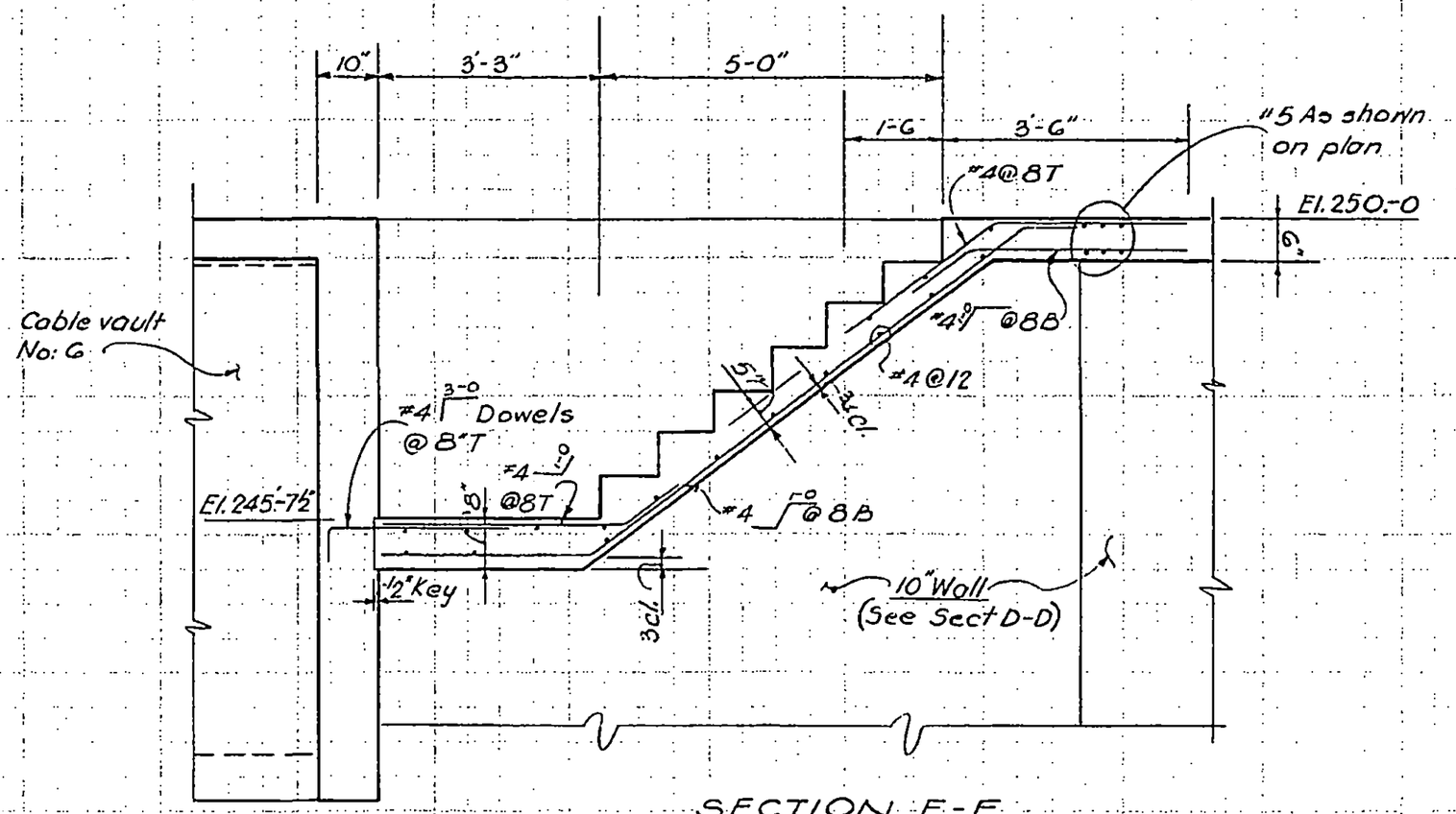

SECTION E-E
(½"-1'-0")

LICENSED PROFESSIONAL ENGINEER
LESLIE E. ROBERTSON
No. 34360
UNIVERSITY OF THE STATE OF NEW YORK

DESIGNED

DRAWN D.C.Huggins

REVIEWED E.L.

8-JK8-13.4

SKILLING, HELLE, CHRISTIANSEN, ROBERTSON — Structural & Civil Engineers

PROJECT THE WORLD TRADE CENTER | TITLE SECTIONS | DATE 10-24-69

REVISIONS

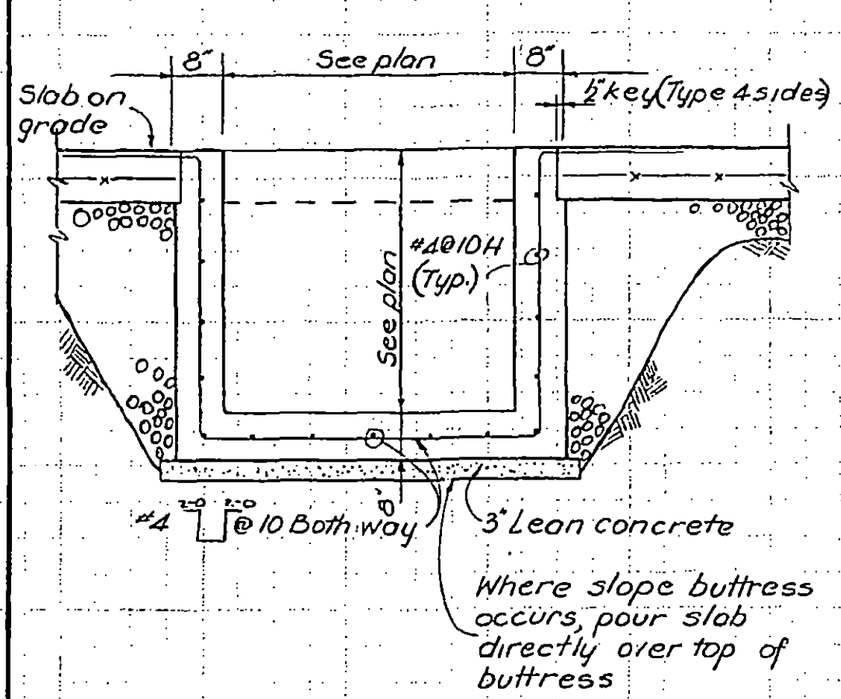

SECTION F-F
(½" = 1'-0")

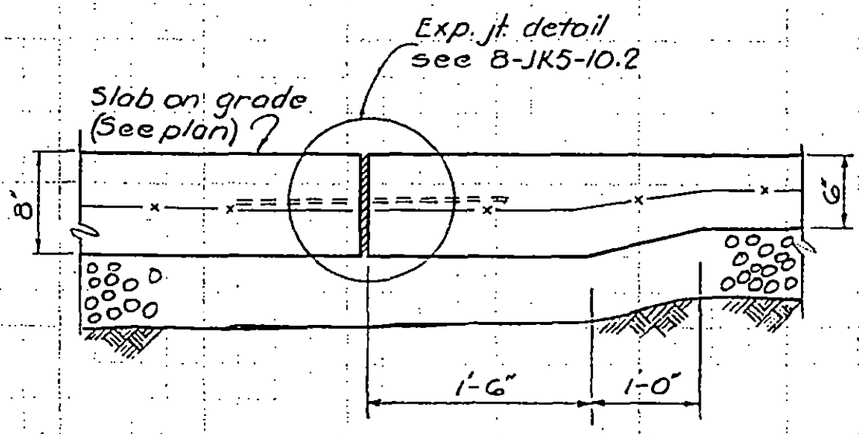

SECTION G-G
(1" = 1'-0")

LICENSED PROFESSIONAL ENGINEER
LESLIE E. ROBERTSON
No. 34360
UNIVERSITY OF THE STATE OF NEW YORK

DESIGNED

DRAWN D.C. Huggins

REVIEWED E.L.

8-JK-8-13.5

SKILLING, HELLE, CHRISTIANSEN, ROBERTSON — Structural & Civil Engineers

PROJECT THE WORLD TRADE CENTER | TITLE SECTIONS | DATE 1-9-70

REVISIONS

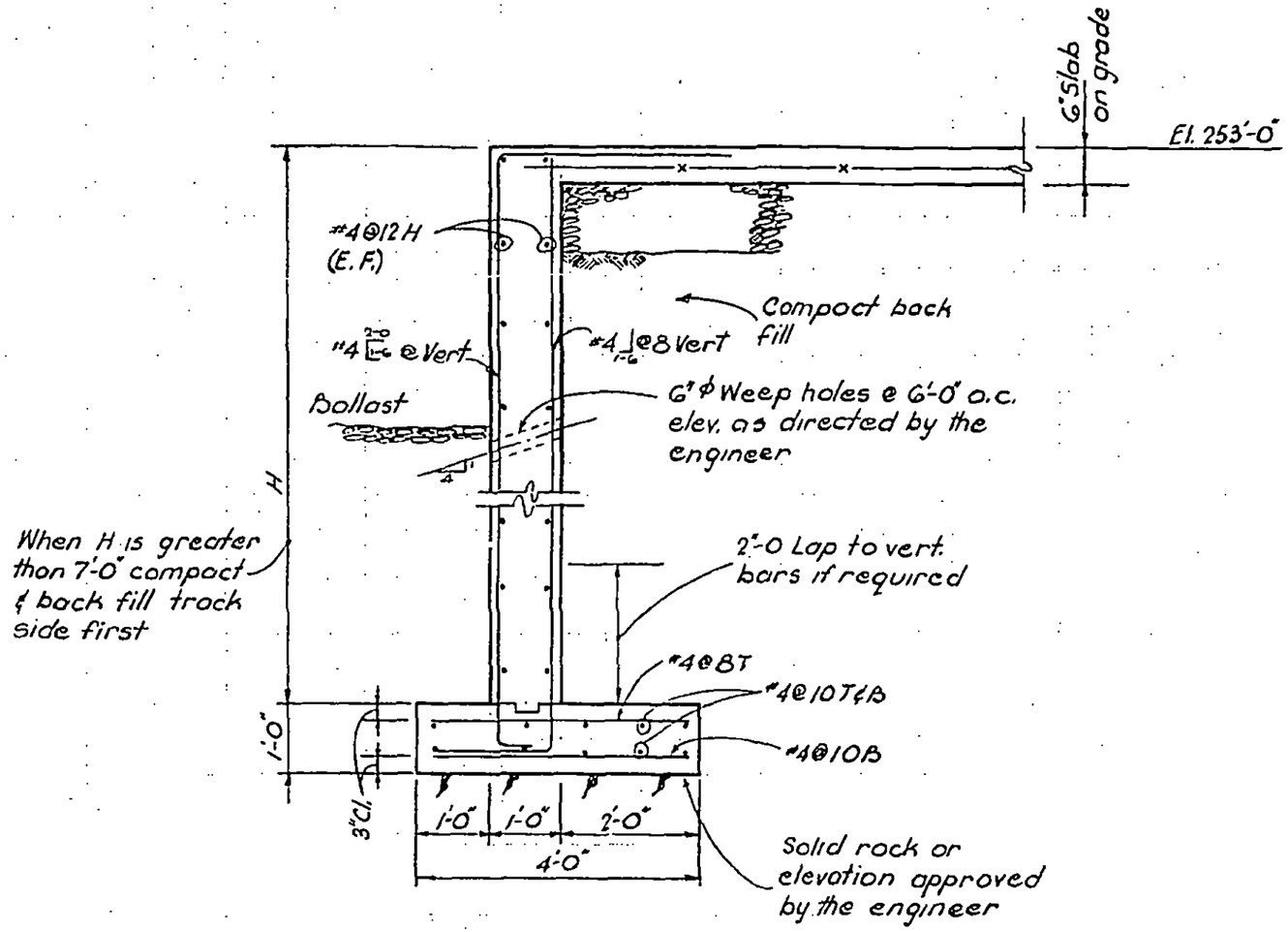

SECTION H-H

(1/2" = 1'-0")

LICENSED PROFESSIONAL ENGINEER — LESLIE E. ROBERTSON — No. 34360 — UNIVERSITY OF THE STATE OF NEW YORK

DESIGNED

DRAWN D.C.Huggins

REVIEWED E.L.

8-JK8-13.6

SKILLING, HELLE, CHRISTIANSEN, ROBERTSON — Structural & Civil Engineers

PROJECT THE WORLD TRADE CENTER | TITLE NORTH SPLICE CHAMBER DETAIL | DATE 5-1-68

REVISIONS

7-8-69 GEN. REV.

9-12-69

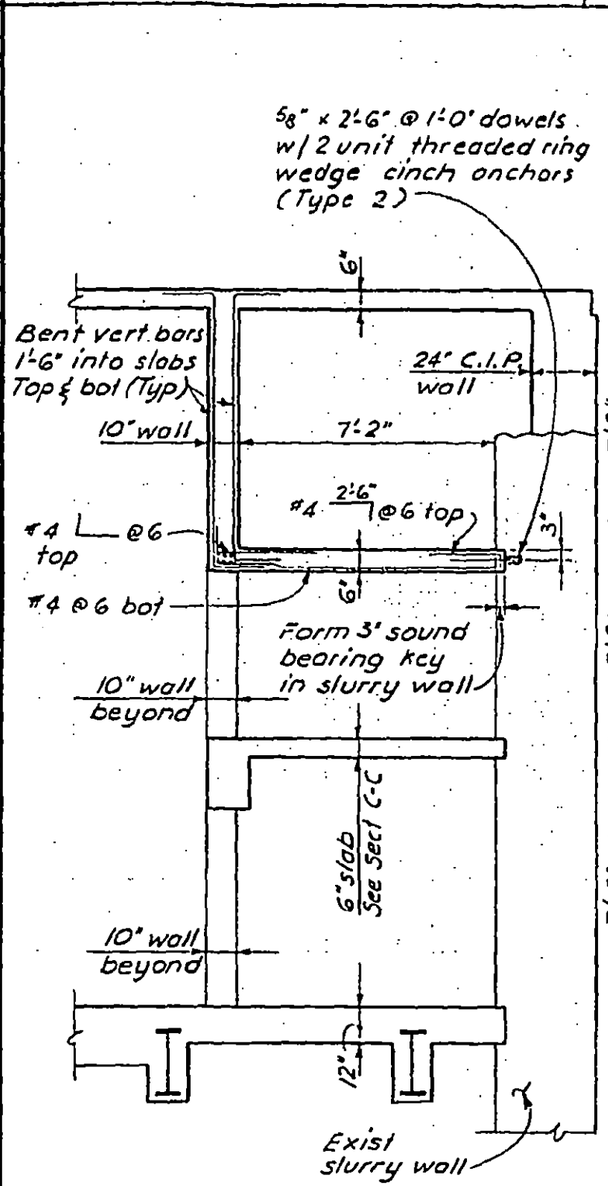

Section A-A
(4" = 1'-0")

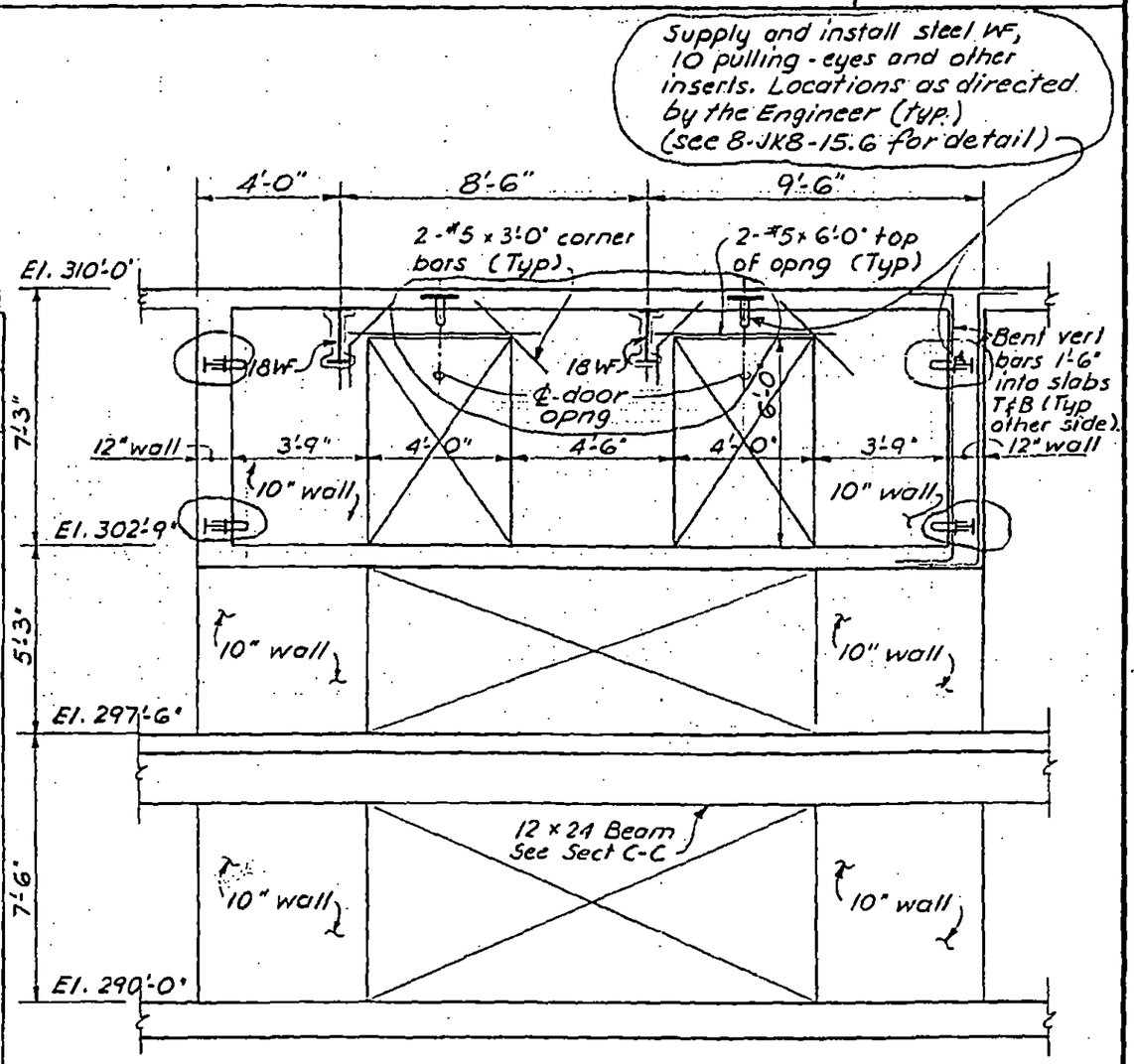

Section B-B
(4" = 1'-0")

Notes:
1. For wall reinf - See 8-JK6-2.2

LICENSED PROFESSIONAL ENGINEER
LESLIE E. ROBERTSON
No. 34360
UNIVERSITY OF THE STATE OF NEW YORK

DESIGNED

DRAWN F. Smith

REVIEWED E.L.

8-JK8-15.1

SKILLING, HELLE, CHRISTIANSEN, ROBERTSON — Structural & Civil Engineers

PROJECT: THE WORLD TRADE CENTER | TITLE: UTILITY RACK DETAIL | DATE: 5-1-68

REVISIONS

7-8-69 GEN. REV.

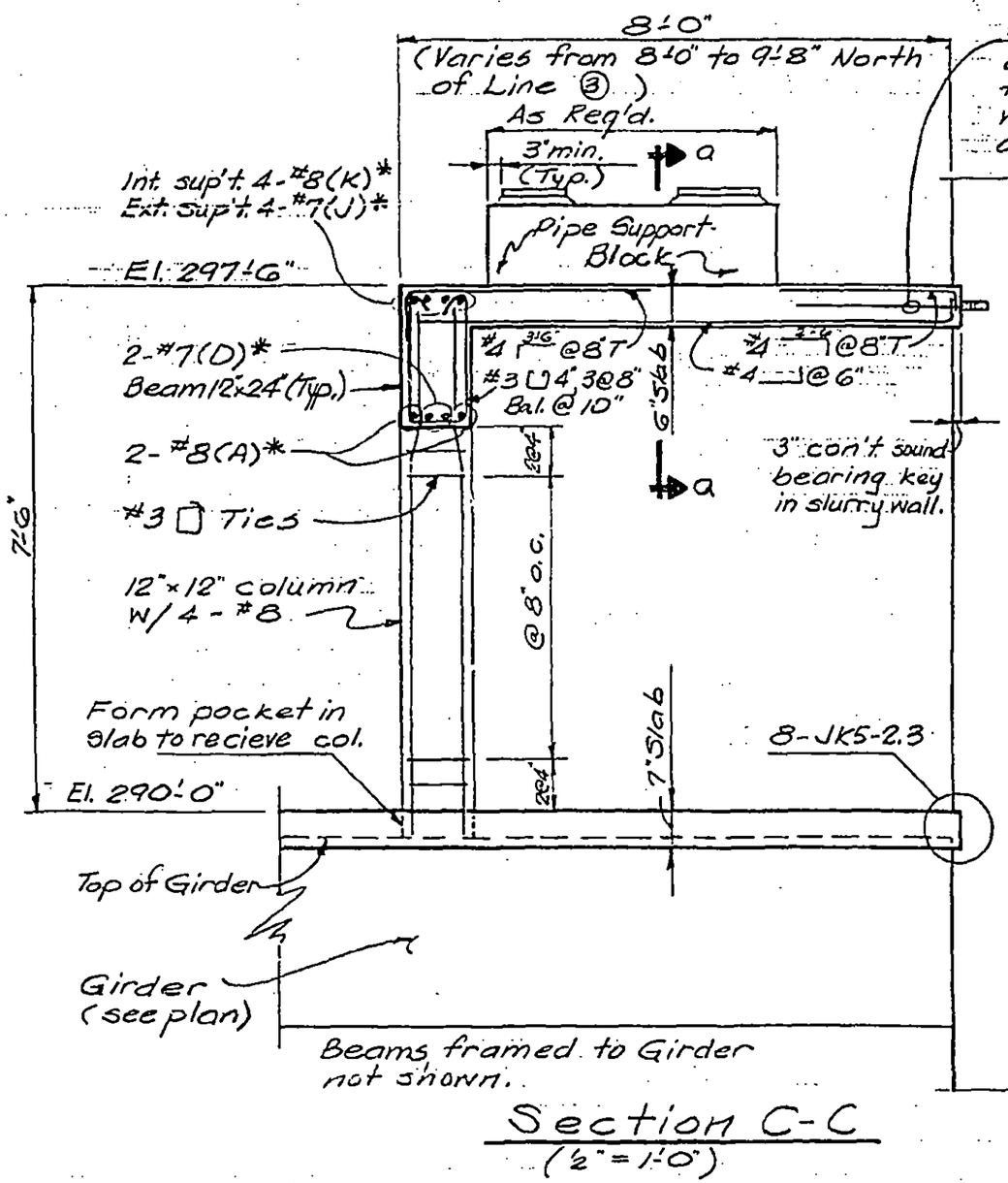

Section C-C
(½" = 1'-0")

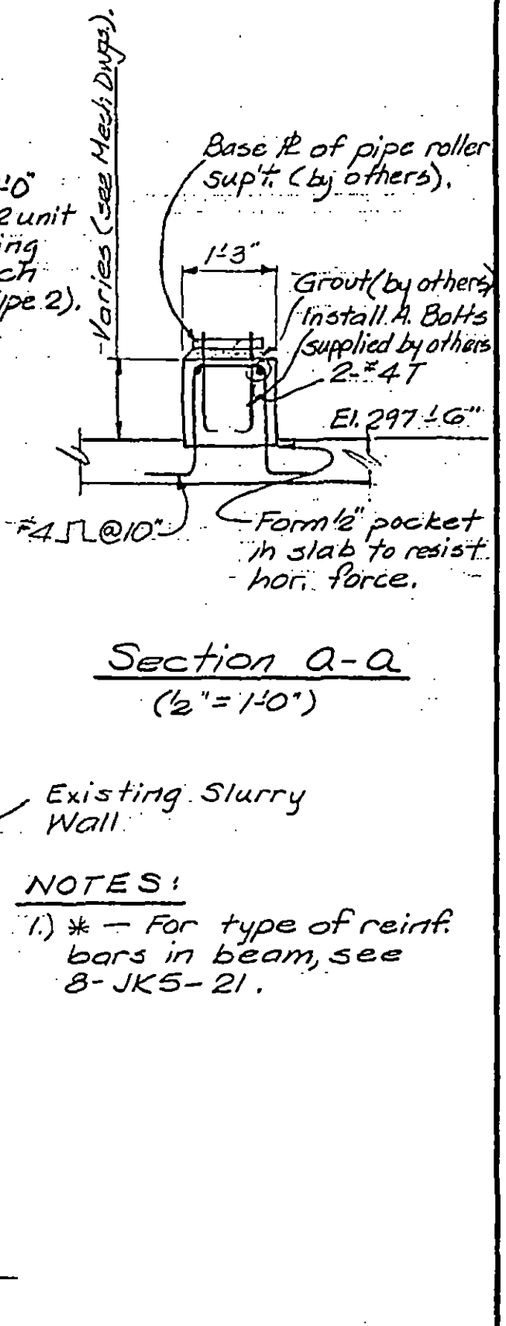

Section a-a
(½" = 1'-0")

NOTES:

1.) * — For type of reinf. bars in beam, see 8-JK5-21.

LICENSED PROFESSIONAL ENGINEER — LESLIE E. ROBERTSON — No. 34360 — UNIVERSITY OF THE STATE OF NEW YORK

DESIGNED

DRAWN: G. Stanton

REVIEWED: E.L.

8-JK8-15.2

SKILLING, HELLE, CHRISTIANSEN, ROBERTSON — Structural & Civil Engineers

PROJECT: THE WORLD TRADE CENTER | TITLE: CENTER SPLICE CHAMBER DETAIL | DATE: 5-1-68

REVISIONS

9-26-69 GEN. REV.

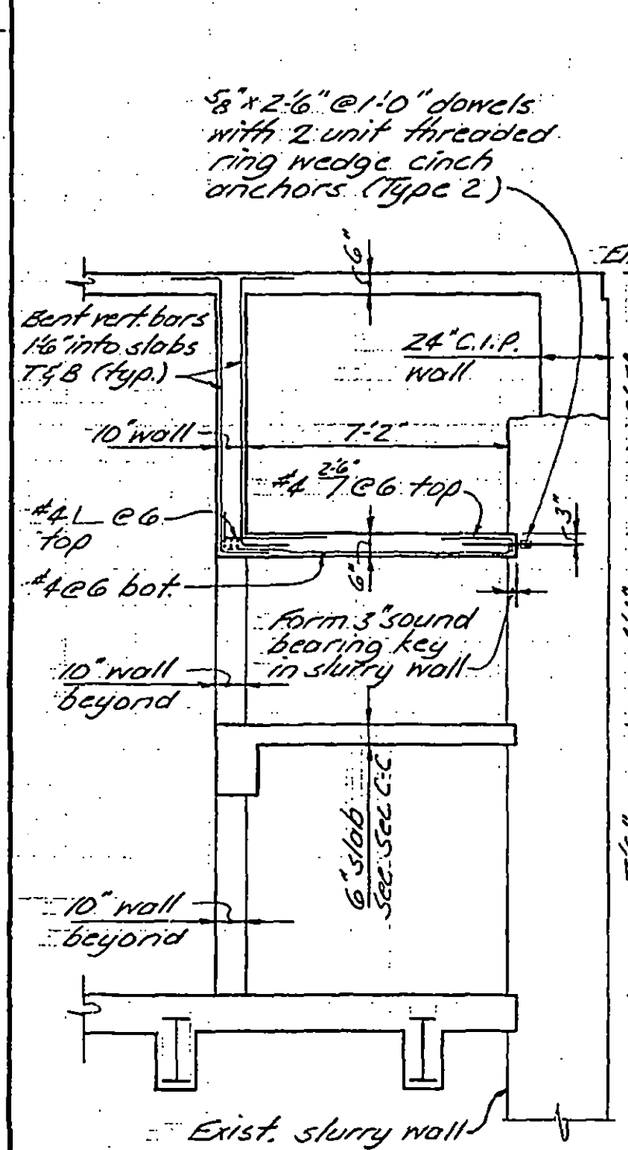

Section D-D
(¼"=1'-0")

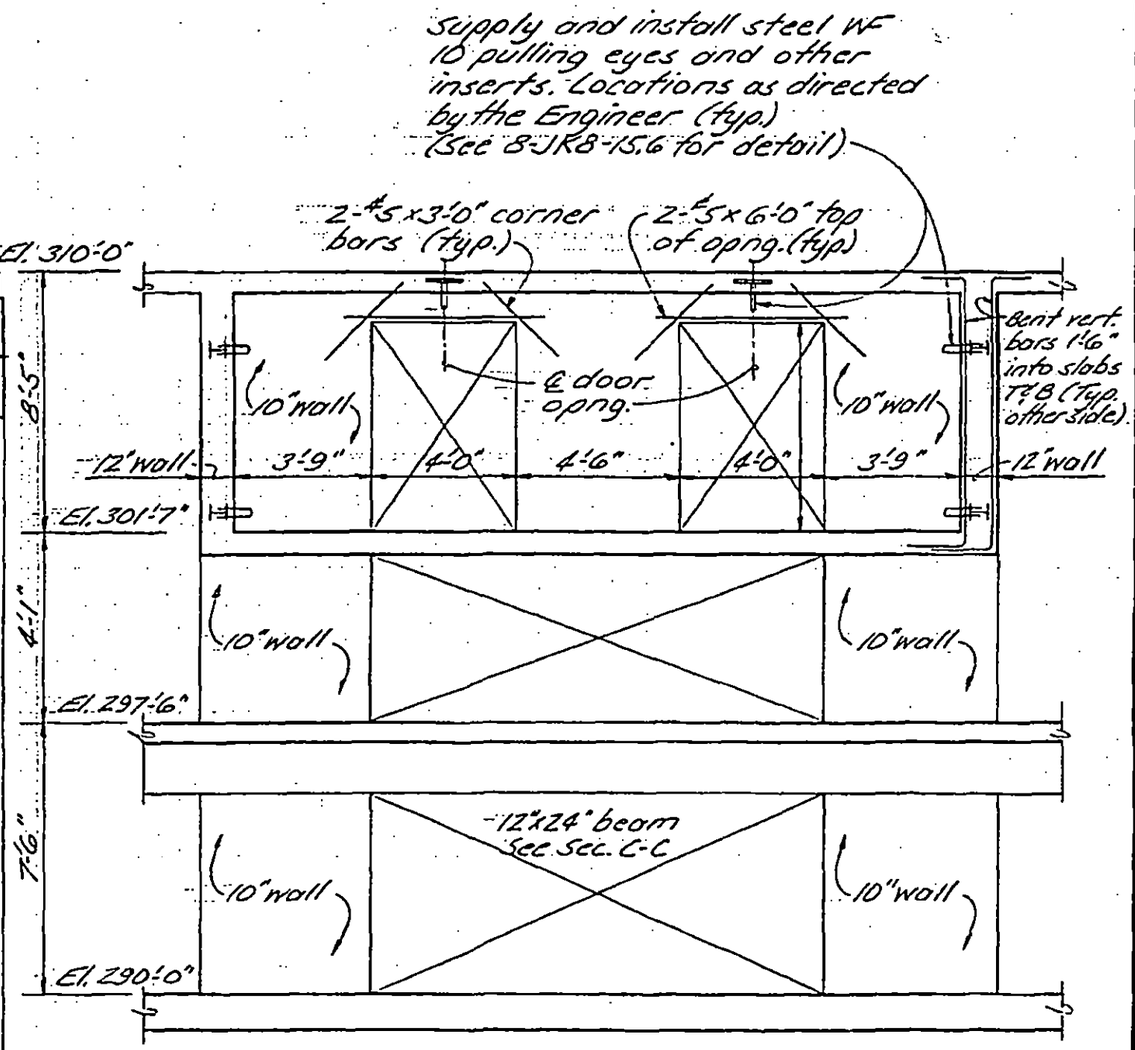

Section E-E
(¼"=1'-0")

Notes:
1. For wall reinf see 8-JK6-2.2

DESIGNED

DRAWN
J. Adams

REVIEWED
E.L.

LICENSED PROFESSIONAL ENGINEER — LESLIE E. ROBERTSON — No. 34360 — UNIVERSITY OF THE STATE OF NEW YORK

8-JK8-15.3

SKILLING, HELLE, CHRISTIANSEN, ROBERTSON — Structural & Civil Engineers

PROJECT THE WORLD TRADE CENTER | TITLE SOUTH SPLICING CHAMBER DETAIL | DATE 5-1-68

REVISIONS

10-28-69 GEN. REV.

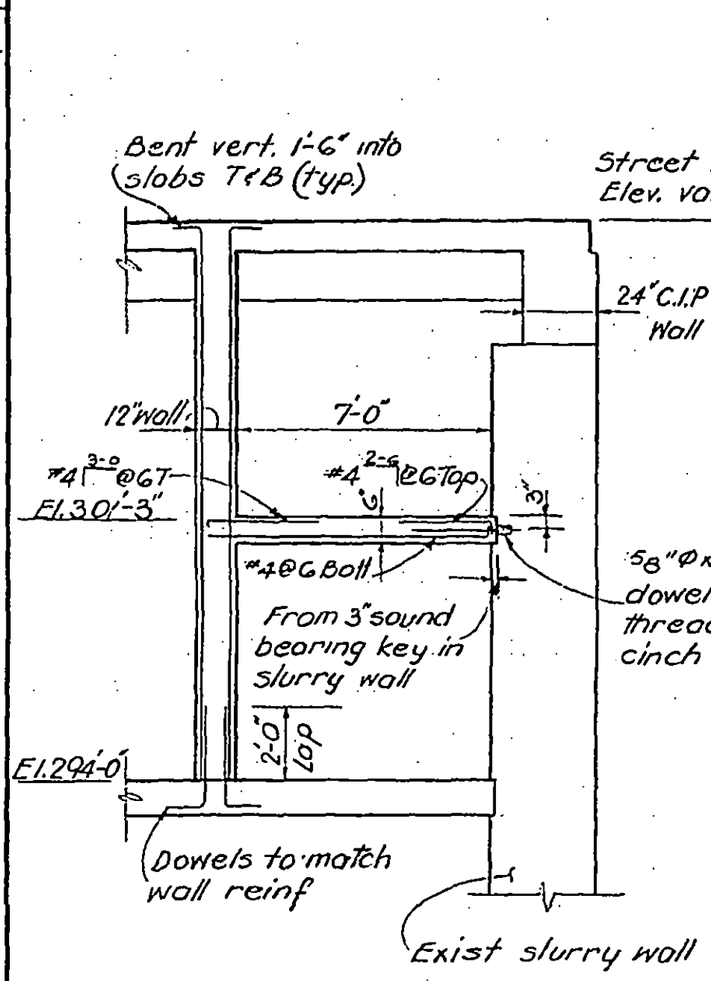

SECTION F-F
(1/4" = 1'-0")

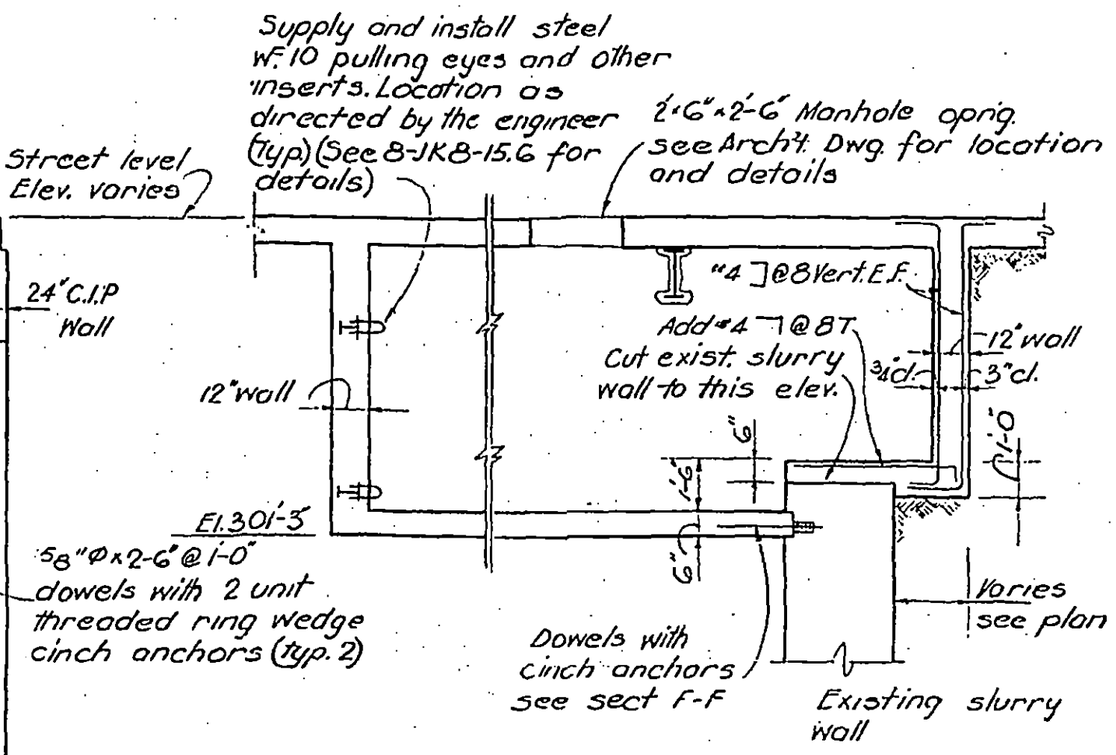

SECTION G-G
(1/4" = 1'-0")

NOTES:-
1. For wall reinf. see 8-JKG-2.2

LICENSED PROFESSIONAL ENGINEER — LESLIE E. ROBERTSON — No. 34360 — UNIVERSITY OF THE STATE OF NEW YORK

DESIGNED

DRAWN D. Huggins

REVIEWED E.L.

8-JK8-15.4

SKILLING, HELLE, CHRISTIANSEN, ROBERTSON — Structural & Civil Engineers

PROJECT THE WORLD TRADE CENTER | TITLE UTILITY RACK DETAIL | DATE 7-23-69

REVISIONS

12-15-69

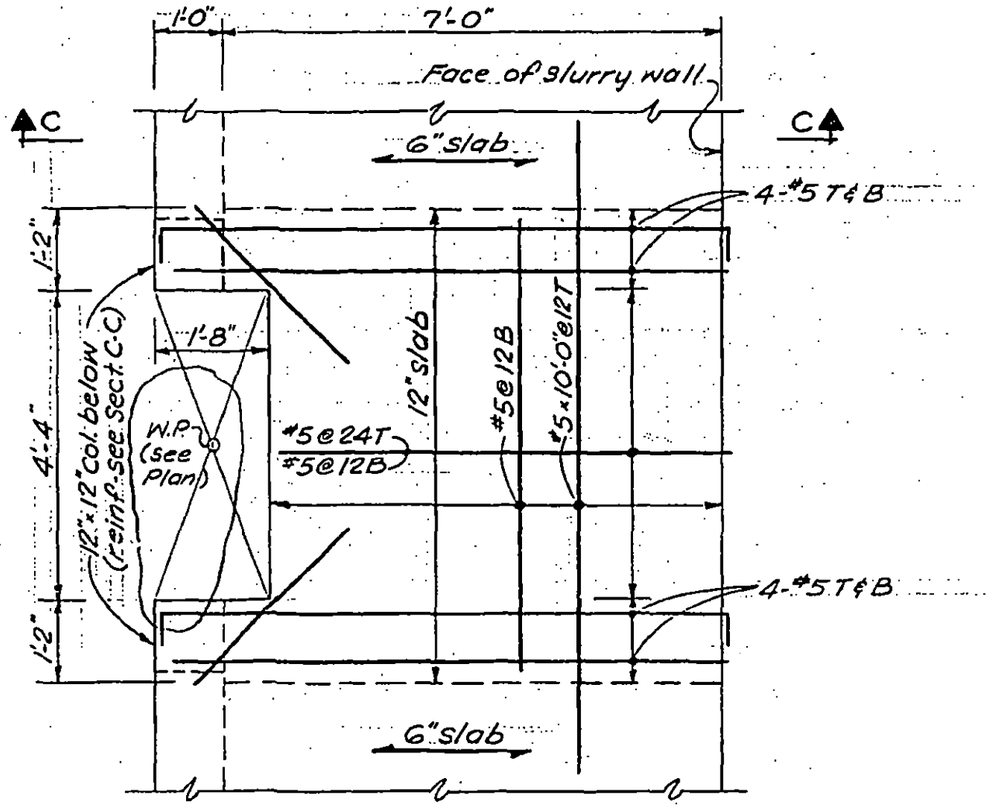

Part Plan of Utility Rack
At Pull & Splice Chamber
(½" = 1'-0")

DESIGNED

DRAWN
S.C.

REVIEWED
E.L.

8-JK8-15.5

SKILLING, HELLE, CHRISTIANSEN, ROBERTSON — Structural & Civil Engineers

PROJECT THE WORLD TRADE CENTER | TITLE DETAIL OF PULLING ANCHOR IN SPLICING CHAMBER | DATE 9-12-69

REVISIONS

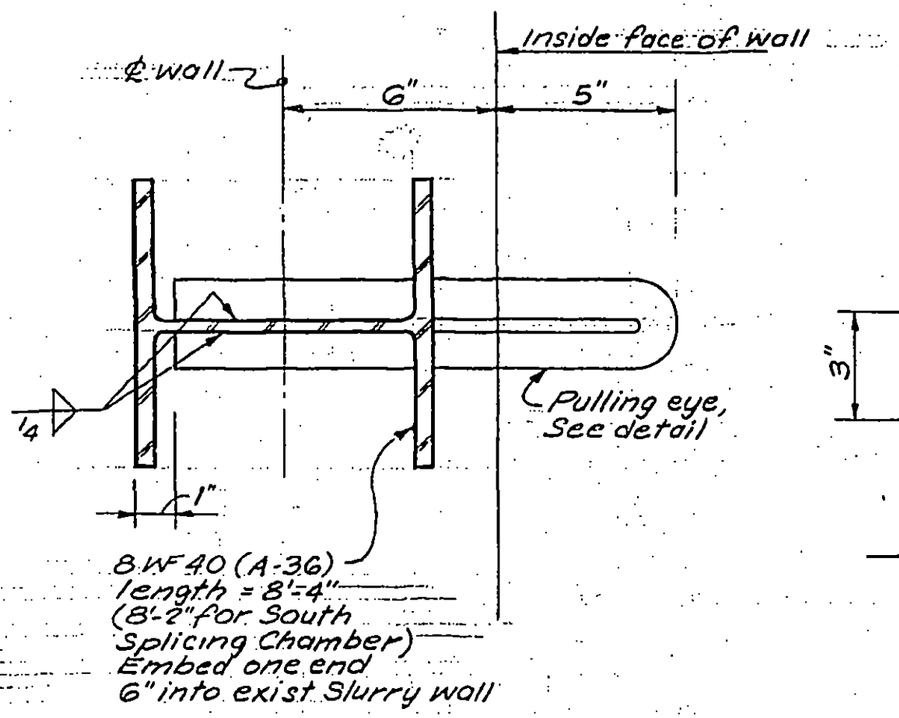

WALL TYPE PULLING ANCHOR

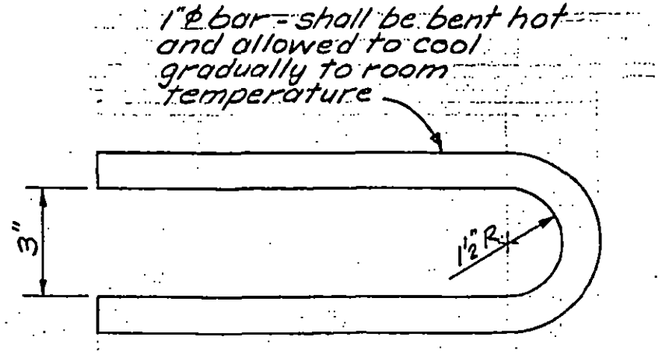

PULLING EYE DETAIL

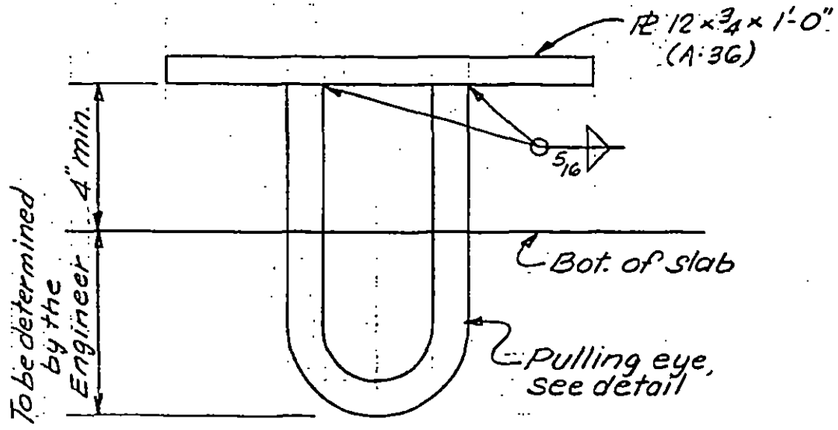

CEILING TYPE PULLING ANCHOR

LICENSED PROFESSIONAL ENGINEER
LESLIE E. ROBERTSON
No. 34360
UNIVERSITY OF THE STATE OF NEW YORK

DESIGNED

DRAWN S.C.

REVIEWED E.L.

8-JK8-15.6

SKILLING, HELLE, CHRISTIANSEN, ROBERTSON — Structural & Civil Engineers

PROJECT THE WORLD TRADE CENTER | TITLE STAIR PASSAGE SECTIONS | DATE 7-1-69

REVISIONS

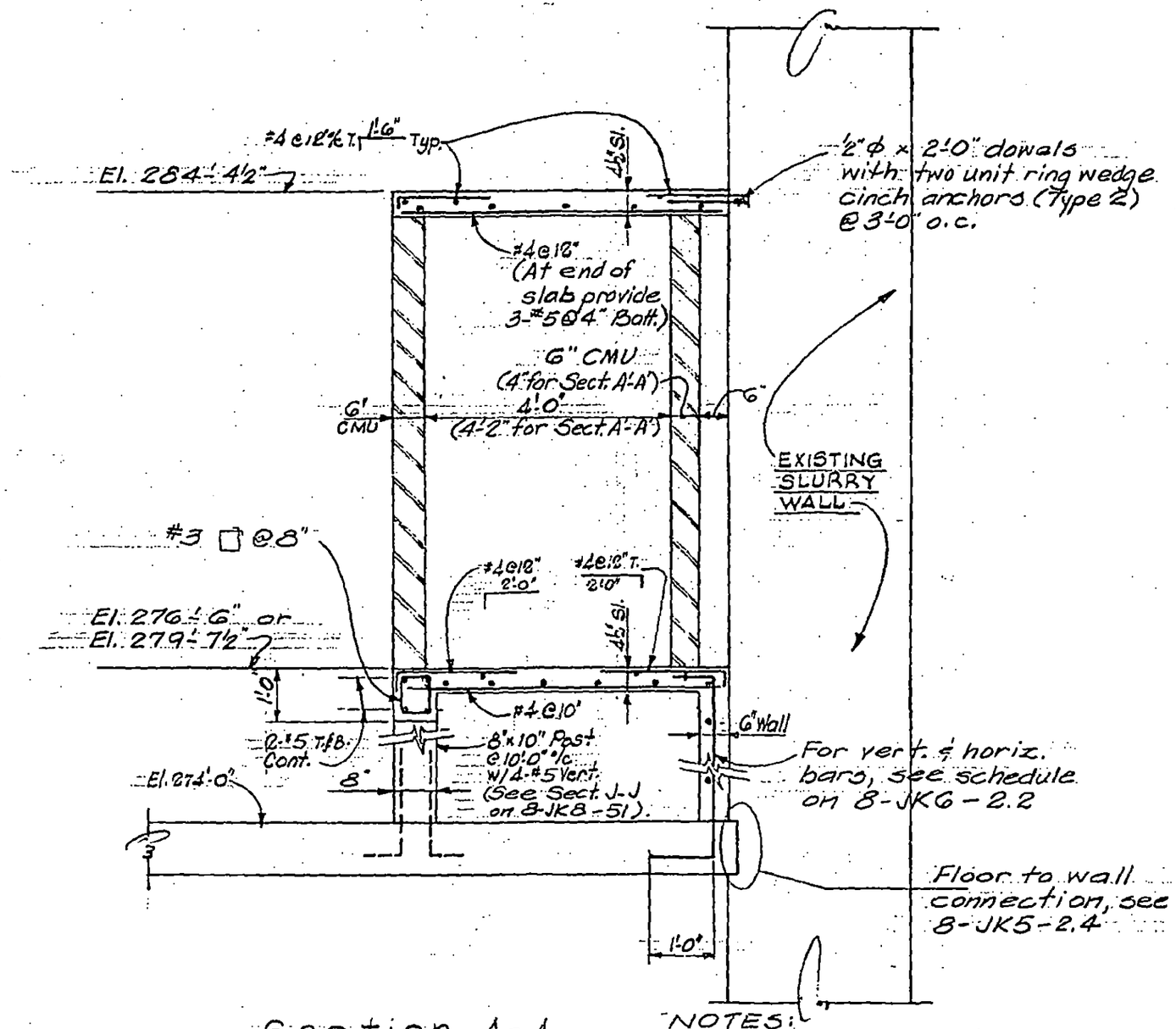

Section A-A
Section A'-A'
½" = 1'-0"

NOTES:
1. All conc. to be $f_c' = 3000$ psi except floor at El. 274 $f_c' = 4000$ psi.

8-JK8-17.1

LICENSED PROFESSIONAL ENGINEER — LESLIE E. ROBERTSON — No. 34360 — UNIVERSITY OF THE STATE OF NEW YORK

DESIGNED

DRAWN S.T.M.

SKILLING, HELLE, CHRISTIANSEN, ROBERTSON — Structural & Civil Engineers

PROJECT: THE WORLD TRADE CENTER | TITLE: STAIR PASSAGE SECTIONS | DATE: 7-1-69

REVISIONS

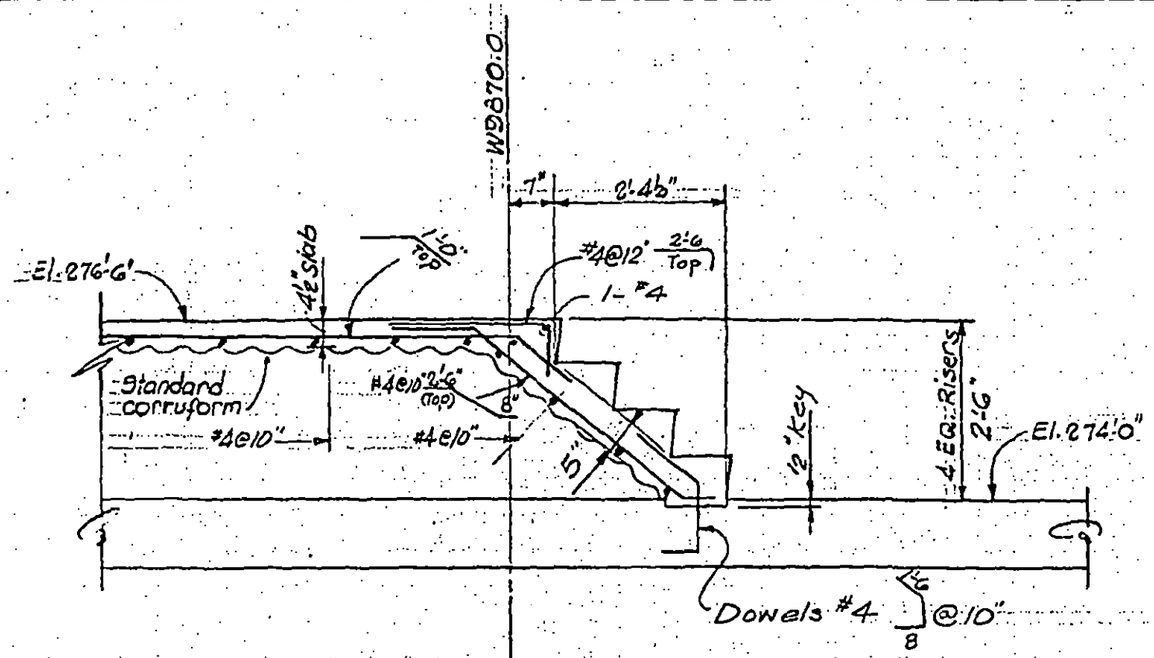

Section C-C
(½" = 1'-0")

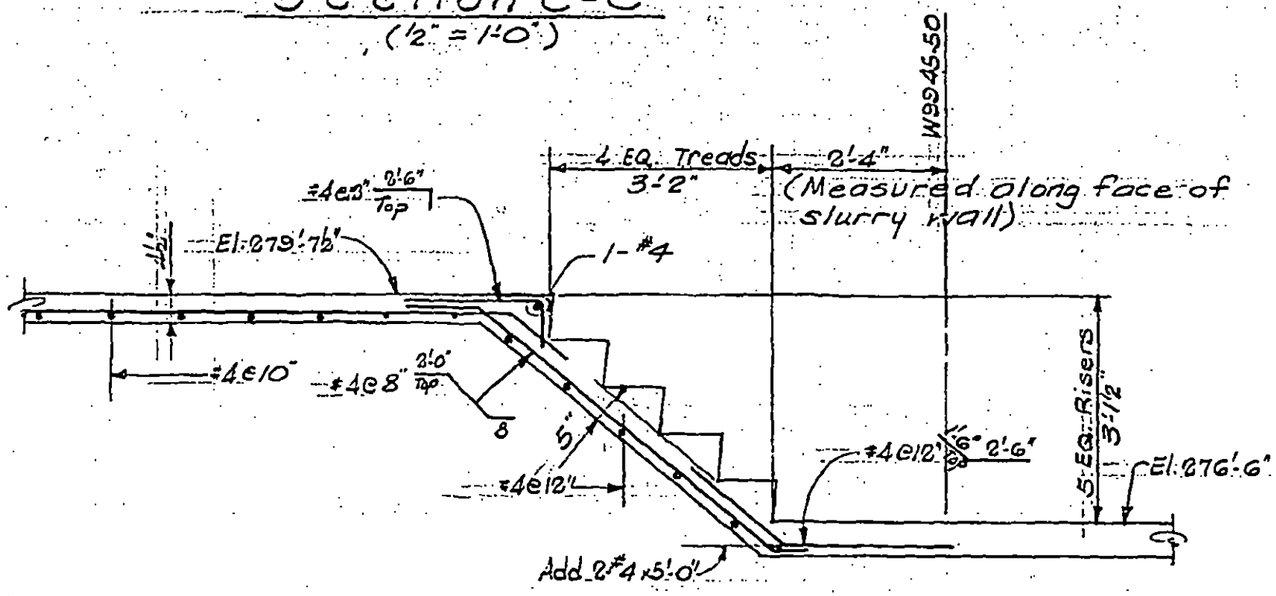

Section B-B
(½" = 1'-0")

LICENSED PROFESSIONAL ENGINEER
LESLIE E. ROBERTSON
No. 34360
UNIVERSITY OF THE STATE OF NEW YORK

DESIGNED

DRAWN: S.T.M.

REVIEWED: E.L.

8-JK8-17.2

SKILLING, HELLE, CHRISTIANSEN, ROBERTSON Structural & Civil Engineers

PROJECT THE WORLD TRADE CENTER | TITLE STAIR PASSAGE SECTIONS | DATE 7-1-69

REVISIONS

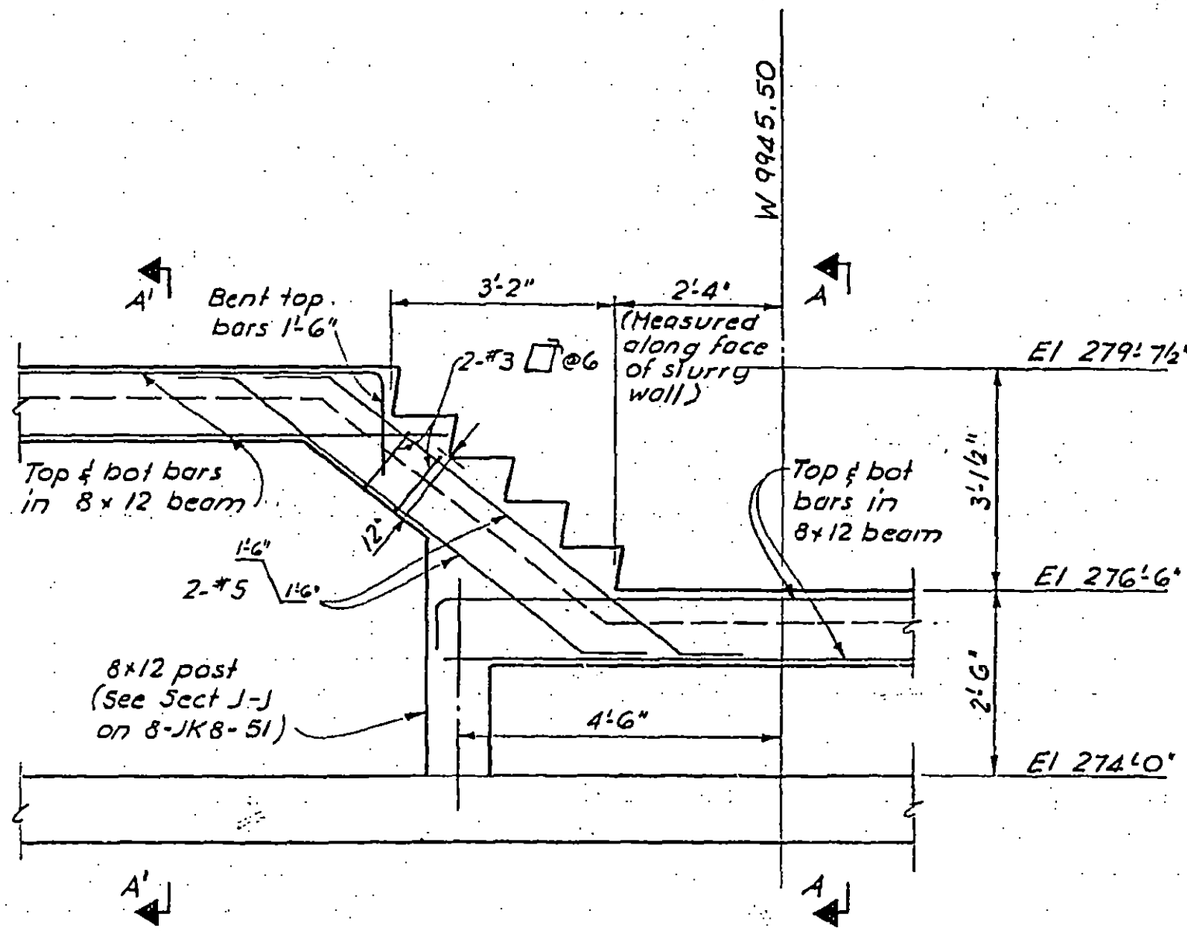

Section D-D

(½" = 1'-0")

DESIGNED

DRAWN F. Smith

REVIEWED E.L.

8-JK8-17.3

SKILLING, HELLE, CHRISTIANSEN, ROBERTSON — Structural & Civil Engineers

PROJECT THE WORLD TRADE CENTER | TITLE STAIR PASSAGE SECTIONS | DATE 7-1-69

REVISIONS

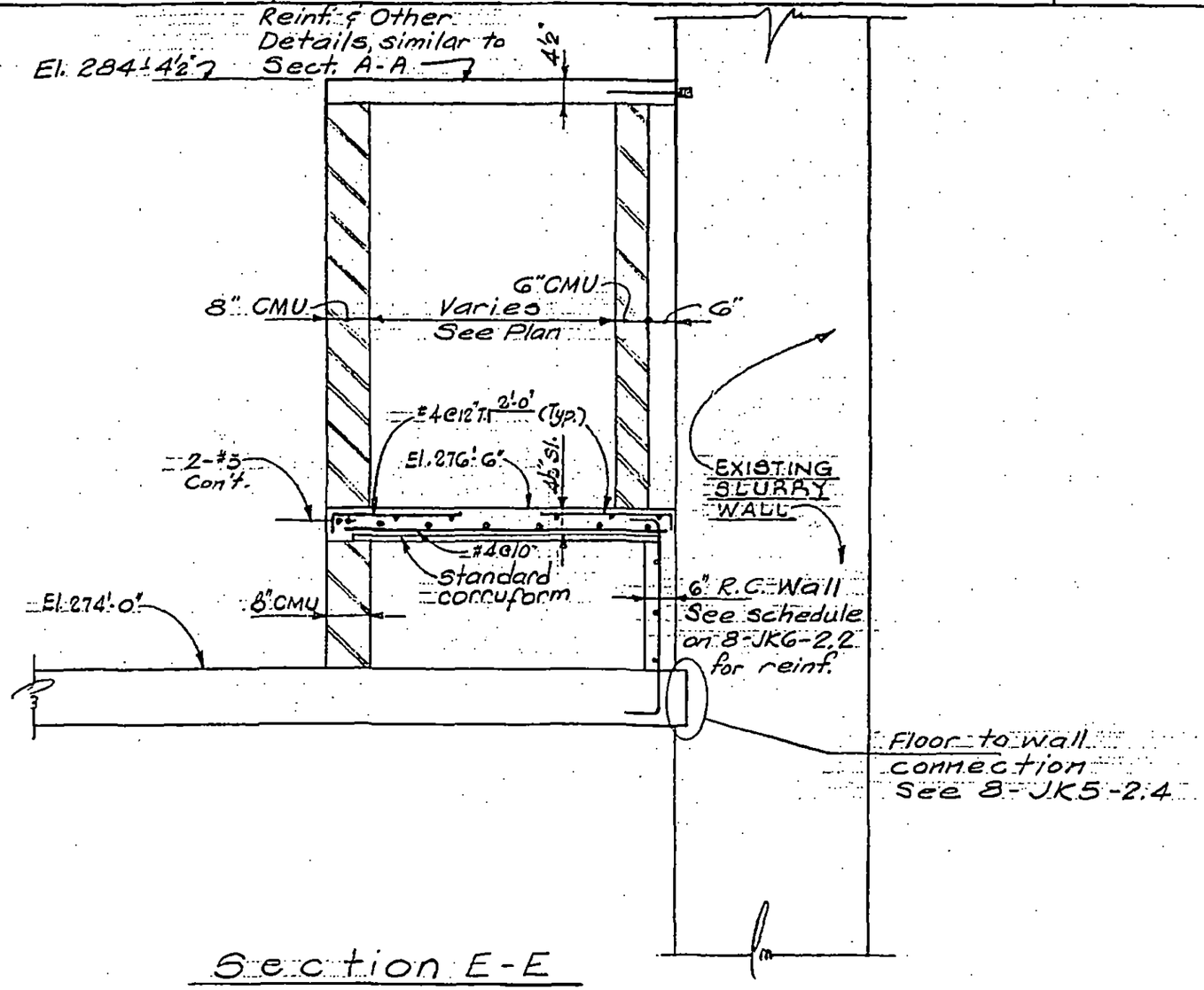

Section E-E

LICENSED PROFESSIONAL ENGINEER — LESLIE E. ROBERTSON — No. 34360 — UNIVERSITY OF THE STATE OF NEW YORK

DESIGNED

DRAWN S.T.M.

REVIEWED E.L.

8-JK8-17.4

SKILLING, HELLE, CHRISTIANSEN, ROBERTSON — Structural & Civil Engineers

PROJECT: THE WORLD TRADE CENTER | TITLE: SECTION AT EXISTING TELEPHONE MANHOLE | DATE: 5-1-68

REVISIONS

9-3-69 GEN. REV.

2-27-70 GEN. REV.

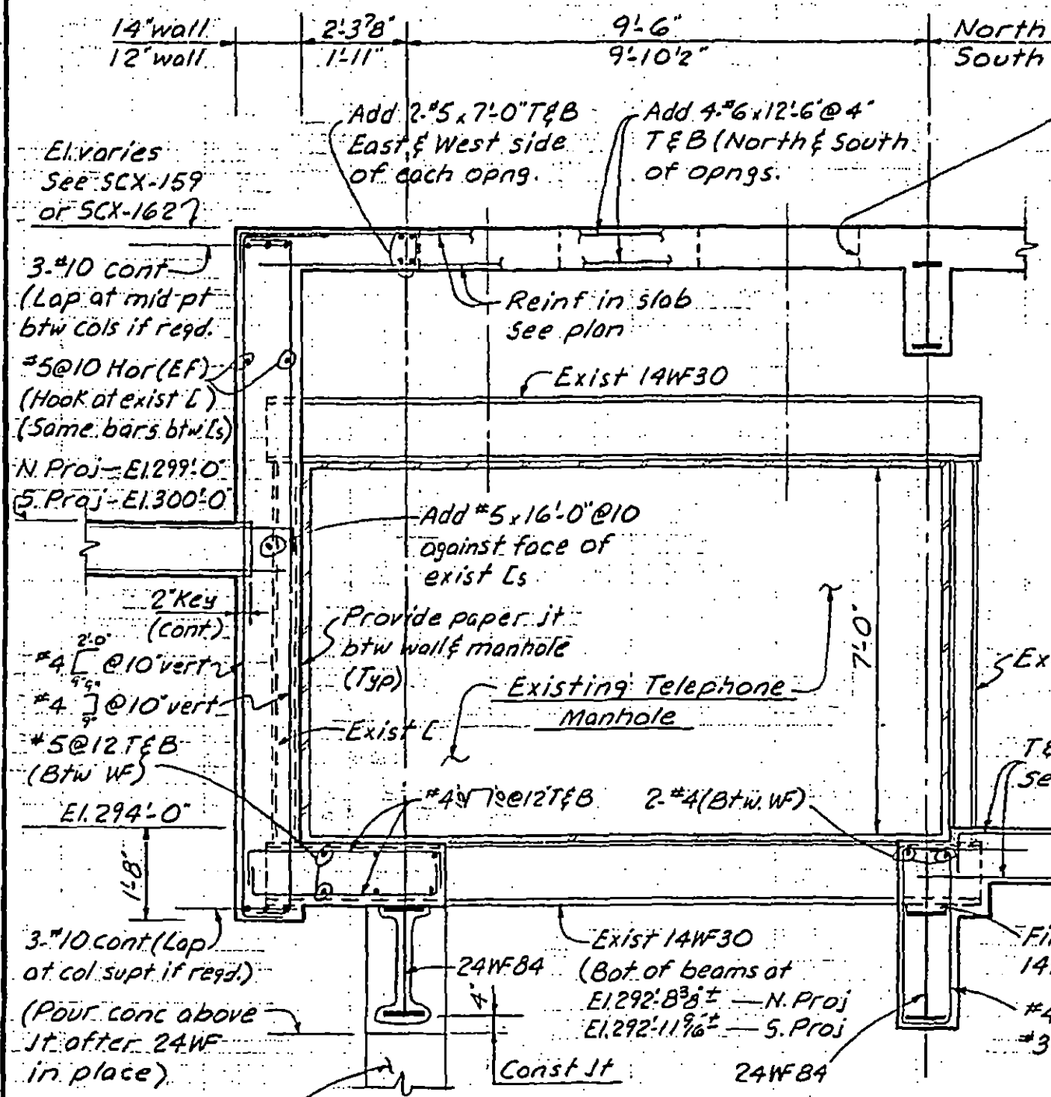

SECTION A-A
(⅜"=1'-0")

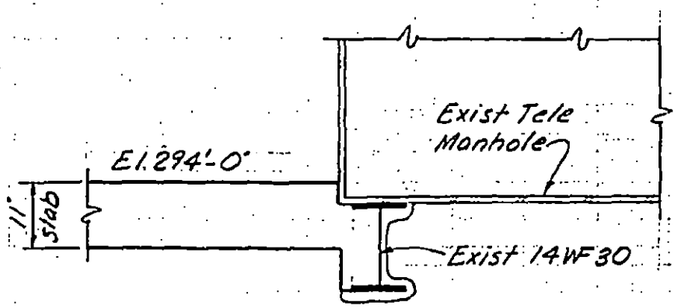

SECTION B-B
(1½"=1'-0")

LICENSED PROFESSIONAL ENGINEER — LESLIE E. ROBERTSON — No. 34360 — UNIVERSITY OF THE STATE OF NEW YORK

DESIGNED

DRAWN A.L.F.

REVIEWED E.L.

8-JK8-19

SKILLING - HELLE - CHRISTIANSEN - ROBERTSON Structural & Civil Engineers

PROJECT THE WORLD TRADE CENTER | TITLE TEMPORARY SHORING - NOTES | DATE 5-1-68

REVISIONS

1. Temporary shoring beams and pipe posts are to be installed prior to casting the slabs. Shoring to be adequately braced during construction and to remain in place until after the removal of the PATH Tubes.
2. Beams & connection material shall conform to ASTM A36 unless another grade is specifically noted and shall be installed in conformance with the AISC specification adopted April 17, 1963
3. Pipe posts shall conform to ASTM A53, Type E or S, Grade B with a sulphur content not exceeding 0.05 percent or API standard 5L, Grade B seamless or electric welded pipe and shall have a minimum yield point of 35 ksi.
4. Bolts shall conform to ASTM A325 except anchor bolts at piers may conform to ASTM A307. A325 bolts shall be installed in conformance with the requirements of "Specifications for Structural Joints Using ASTM A325 or A490 Bolts" approved by Research Council on Riveted and bolted Joints of the Engineering Foundation, Sept. 1, 1966.
5. Welding of structural steel shall conform to the requirements of the AISC specification adopted April 17, 1963 and the "Code for welding in Building Construction" D1.0-66 by the AWS.
6. Shims shall be installed between beams and slab as required to maintain bearing and shall conform to ASTM A36
7. When shoring is removed, pipes shall be cut off at least one inch below top of slab and slab patched. Pipes shall be cut off smooth with the bottom of plates embedded in slab. Temporary connections to permanent construction shall be cut off at face of permanent construction.

8-JK8-20.1

SKILLING - HELLE - CHRISTIANSEN - ROBERTSON Structural & Civil Engineers

PROJECT THE WORLD TRADE CENTER | TITLE TEMPORARY SHORING - SECTIONS | DATE 5-1-68

REVISIONS

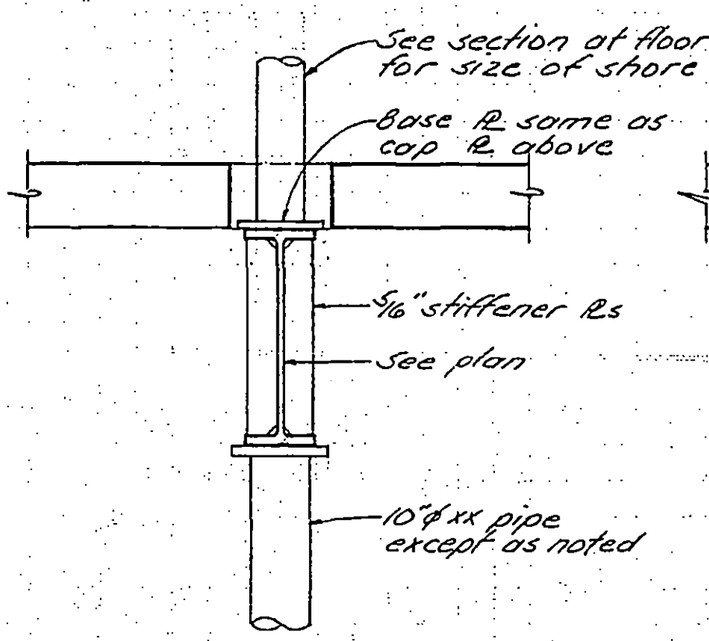

SECTION A-A

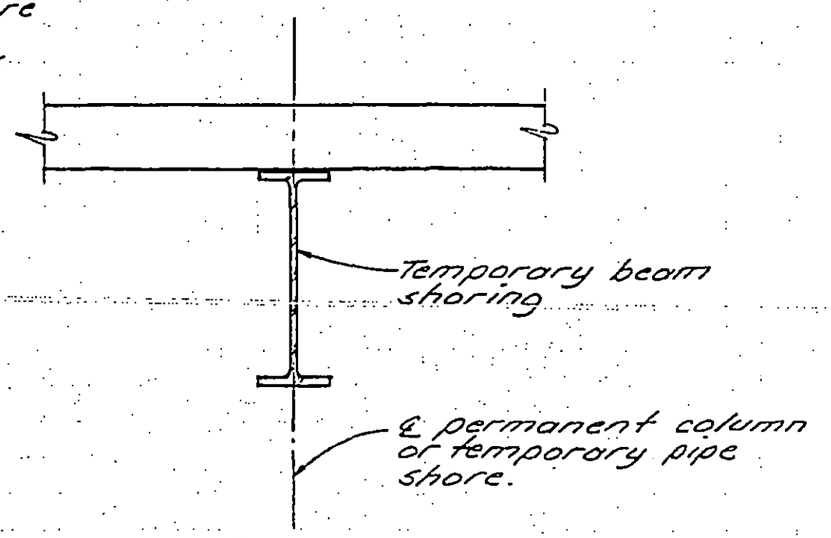

SECTION B-B

Note: Shoring beam connections to permanent columns shall be equivalent to the standard connections given in the AISC Manual of Steel Construction (pp. 4-9 to 4-31). Loads for these connections shall be the allowable loads on beams given in the beam load tables in the AISC Manual of Steel Construction (pp. 2-10 to 2-43).

LICENSED PROFESSIONAL ENGINEER
LESLIE E. ROBERTSON
No. 34360
UNIVERSITY OF THE STATE OF NEW YORK

8-JKB-20.2

SKILLING - HELLE - CHRISTIANSEN - ROBERTSON Structural & Civil Engineers

PROJECT THE WORLD TRADE CENTER | TITLE TEMPORARY SHORING - SECTIONS | DATE 5-1-68

REVISIONS

PIPE SHORE	BASE PL SIZE	MIN. PIER SIZE
6"ϕ std.	14"x1¼"x1'-2"	16"x16"
8"ϕ std.	16"x1¾"x1'-4"	18"x18"
10"ϕ std.	20"x2¼"x1'-8"	22"x22"
10"ϕ XX	30"x2¾"x2'-6"	32"x32"
12"ϕ std.	28"x2¼"x2'-2"	36"x36"

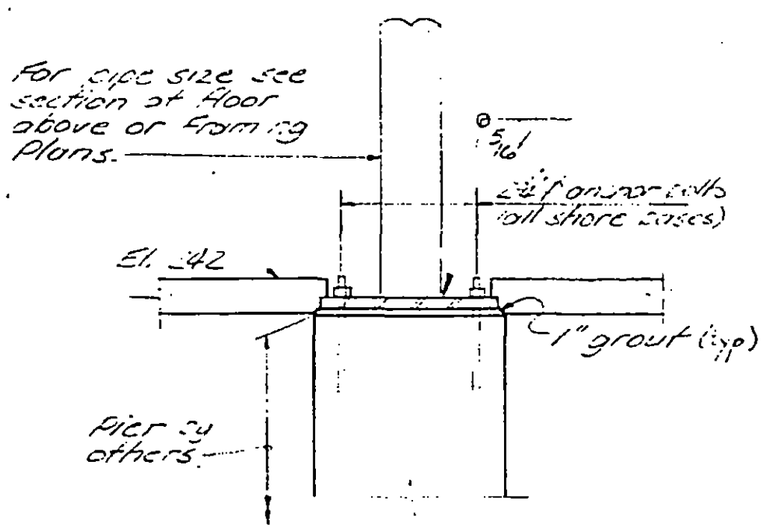

SECTION C-C

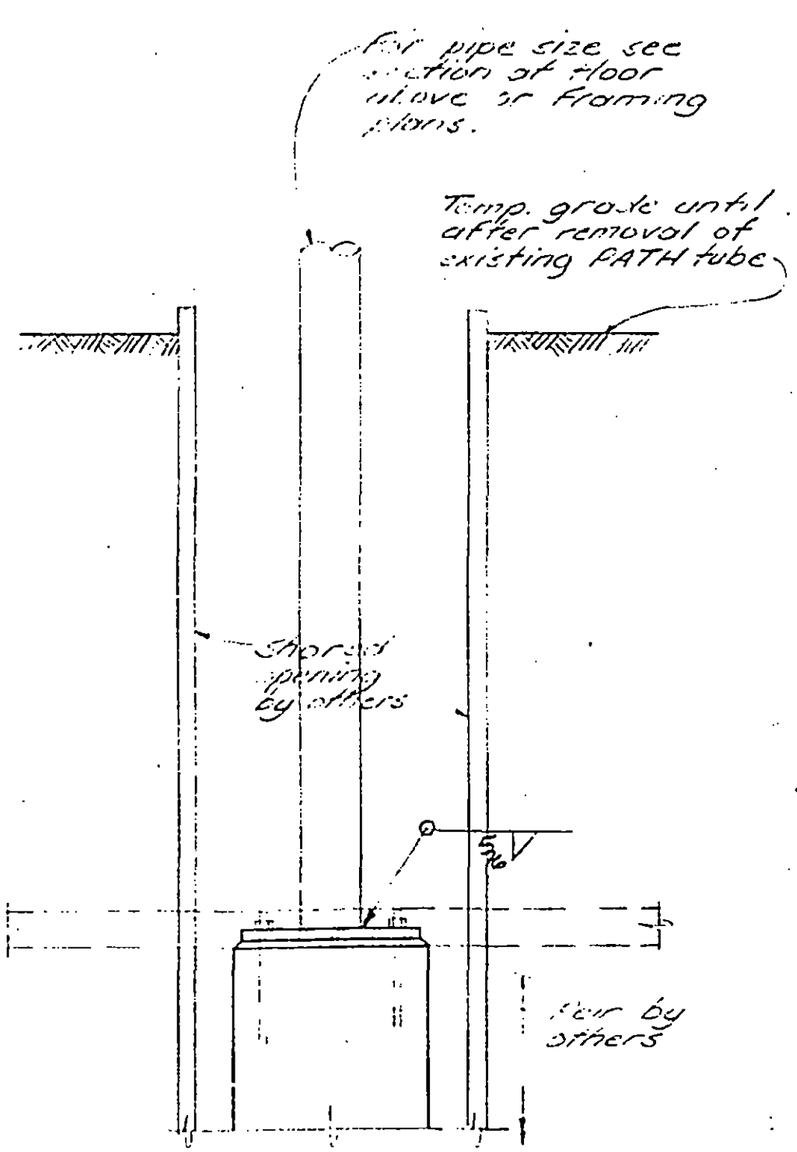

SECTION D-D

PROFESSIONAL ENGINEER
L. ROBERTSON
No. 34360
UNIVERSITY OF THE STATE OF NEW YORK

8-JK8-20.3

SKILLING - HELLE - CHRISTIANSEN - ROBERTSON Structural & Civil Engineers

PROJECT THE WORLD TRADE CENTER | TITLE TEMPORARY SHORING - SECTIONS | DATE 5-1-68

REVISIONS

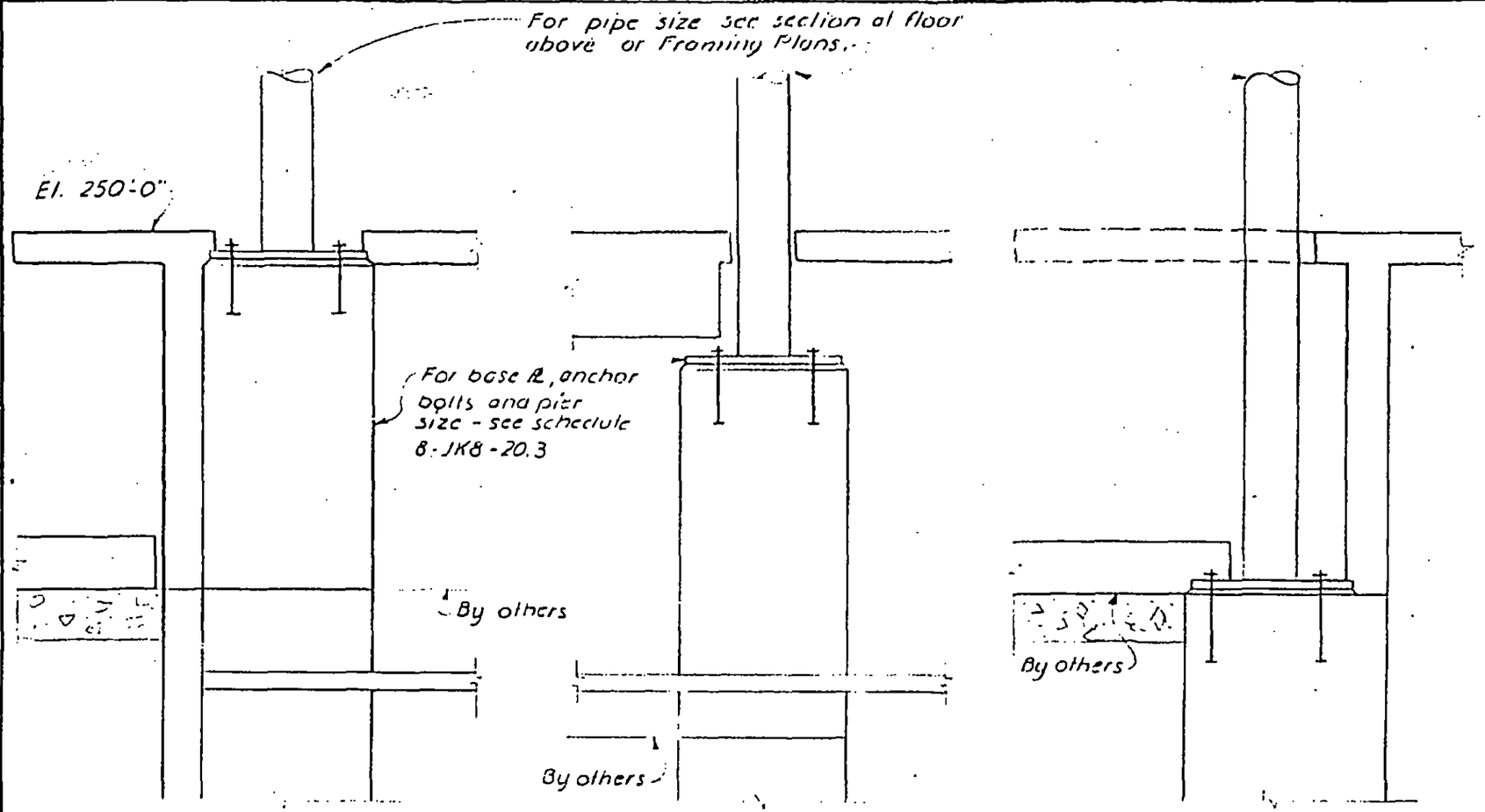

Section E-E

Section F-F

Section G-G

LICENSED PROFESSIONAL ENGINEER
LESLIE E. ROBERTSON
UNIVERSITY OF THE STATE

8-JK8-20.4

SKILLING - HELLE - CHRISTIANSEN - ROBERTSON Structural & Civil Engineers

PROJECT THE WORLD TRADE CENTER | TITLE TEMPORARY SHORING - SECTIONS | DATE 5-1-68

REVISIONS

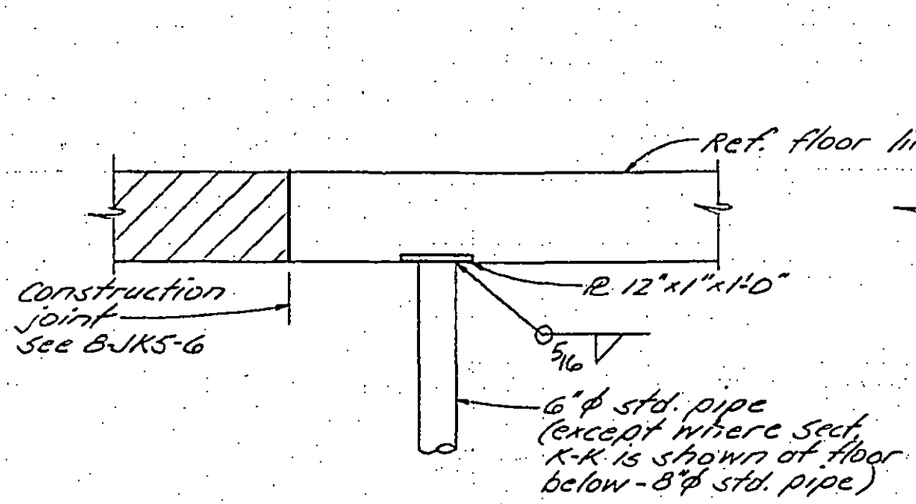

SECTION H-H

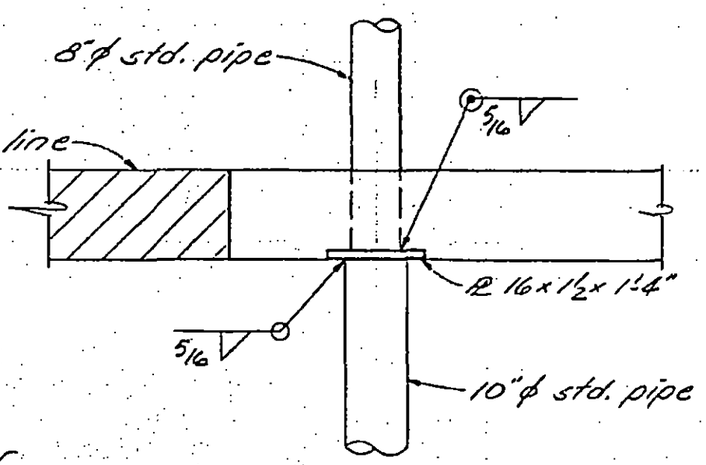

SECTION K-K

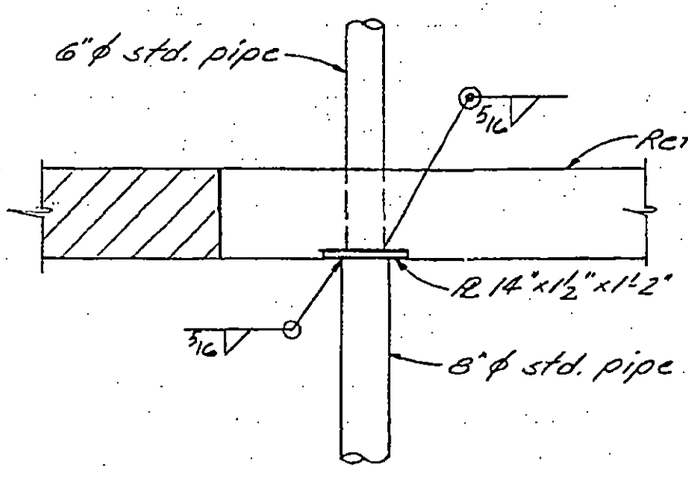

SECTION J-J

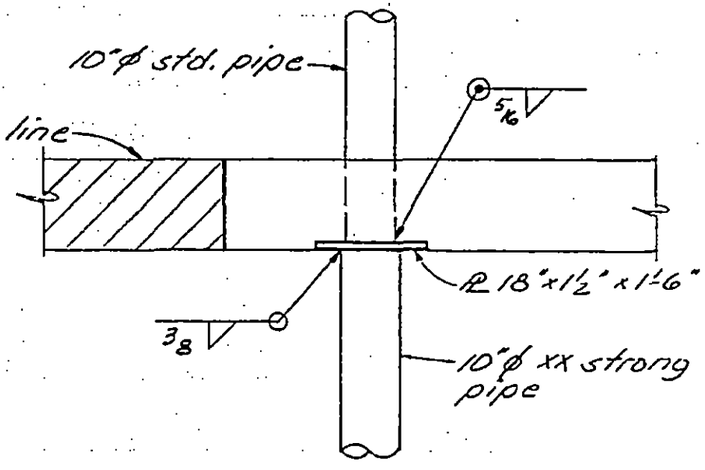

SECTION M-M

LICENSED PROFESSIONAL ENGINEER
LESLIE E. ROBERTSON
No. 34360
UNIVERSITY OF THE STATE OF NEW YORK

8-JKB-20.5

SKILLING - HELLE - CHRISTIANSEN - ROBERTSON Structural & Civil Engineers

PROJECT THE WORLD TRADE CENTER | TITLE TEMPORARY SHORING - SECTIONS | DATE 5-1-68

REVISIONS

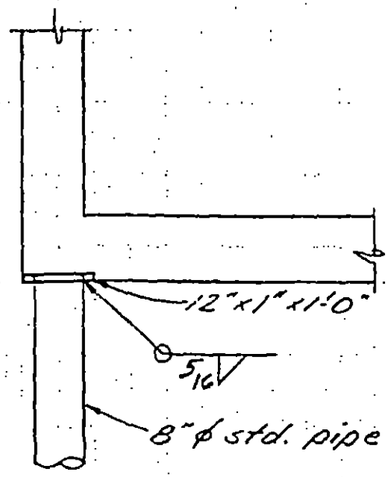

SECTION N-N

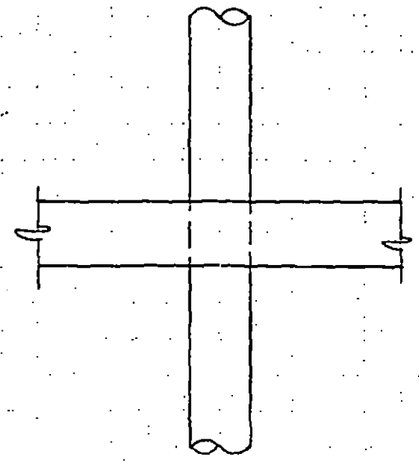

SECTION P-P

LICENSED PROFESSIONAL ENGINEER
LESLIE E. ROBERTSON
No. 34360
UNIVERSITY OF THE STATE OF NEW YORK

B-JKB-20.6

SKILLING, HELLE, CHRISTIANSEN, ROBERTSON — Structural & Civil Engineers

PROJECT: THE WORLD TRADE CENTER | TITLE: TEMPORARY SHORING - CONCRETE ALTERNATE | DATE: 3-5-69

REVISIONS

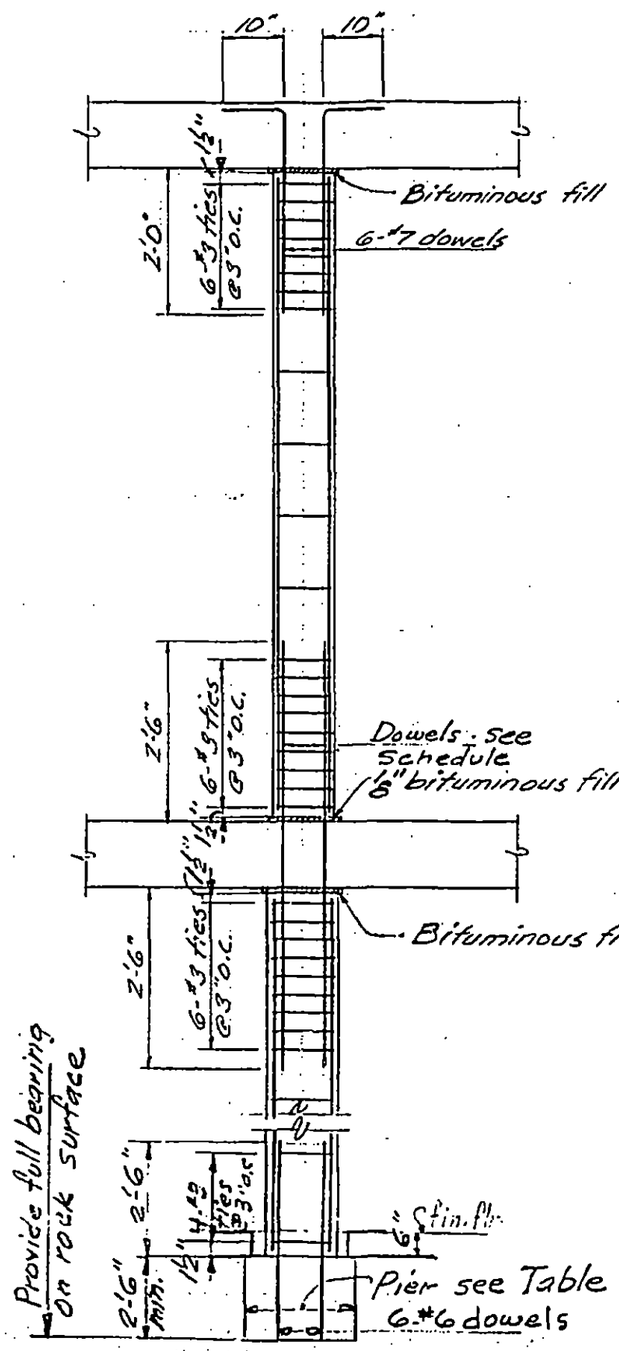

TABLE

H	Steel Shoring (El. 264'-0" Postensioned)	Revised Steel Shoring	Equivalent Concrete Column Shoring			Min. Pier size
			Col. Diam.	Vert. Reinf.	Ties	
11'-0"	6"ϕ	5"ϕ	10"ϕ	6-#6	#3@12	16"x16"
11'-0"	8"ϕ	6"ϕ	12"ϕ	6-#6	#3@14	18"x18"
11'-0"	10"ϕ	8"ϕ	12"ϕ	6-#6	#3@14	22"x22"
11'-0"	10"ϕ XX	10"ϕ	12"ϕ	6-#6	#3@14	32"x32"
14'-0"	6"ϕ	6"ϕ	12"ϕ	6-#6	#3@14	16"x16"
14'-0"	8"ϕ	8"ϕ	12"ϕ	6-#6	#3@14	18"x18"
14'-0"	10"ϕ XX	10"ϕ X	12"ϕ	6-#6	#3@14	32"x32"
19'-6"	8"ϕ (braced)	10"ϕ (not braced)	12"ϕ	6-#6	#3@14	22"x22"

H = maximum distance from top of slab to top of slab.
All pipe column to be standard grade except as noted.

Construction procedure:
1.) Screed column level with soffit of conc. slab
2.) After concrete has taken initial set, fill top of column with bituminous filler to bring level with soffit of slab. Provide not less than 6" bituminous filler.
3.) Cast concrete slab.
4.) Within an area not less than 1" greater than the column, provide 6" bituminous fill
5.) Repeat steps 1.) through 4.) as required.

Notes:
1) f'c = 3000 psi
2) ASTM A615-60 reinforcing
3) Forms: Sonotube or equivalent

DOWEL SCHEDULE	
10"ϕ to 10"ϕ	6-#7
All others	6-#8

LICENSED PROFESSIONAL ENGINEER — LESLIE E. ROBERTSON — No. 34360 — UNIVERSITY OF THE STATE OF NEW YORK

DESIGNED G. Raizis
DRAWN J. Adams
REVIEWED L.E. Robertson

8-JK8-20.7

SKILLING, HELLE, CHRISTIANSEN, ROBERTSON — Structural & Civil Engineers

PROJECT THE WORLD TRADE CENTER | TITLE SOUTH PROJECTION – SECTIONS | DATE 7-9-68

REVISIONS

4-16-69 GEN. REV.

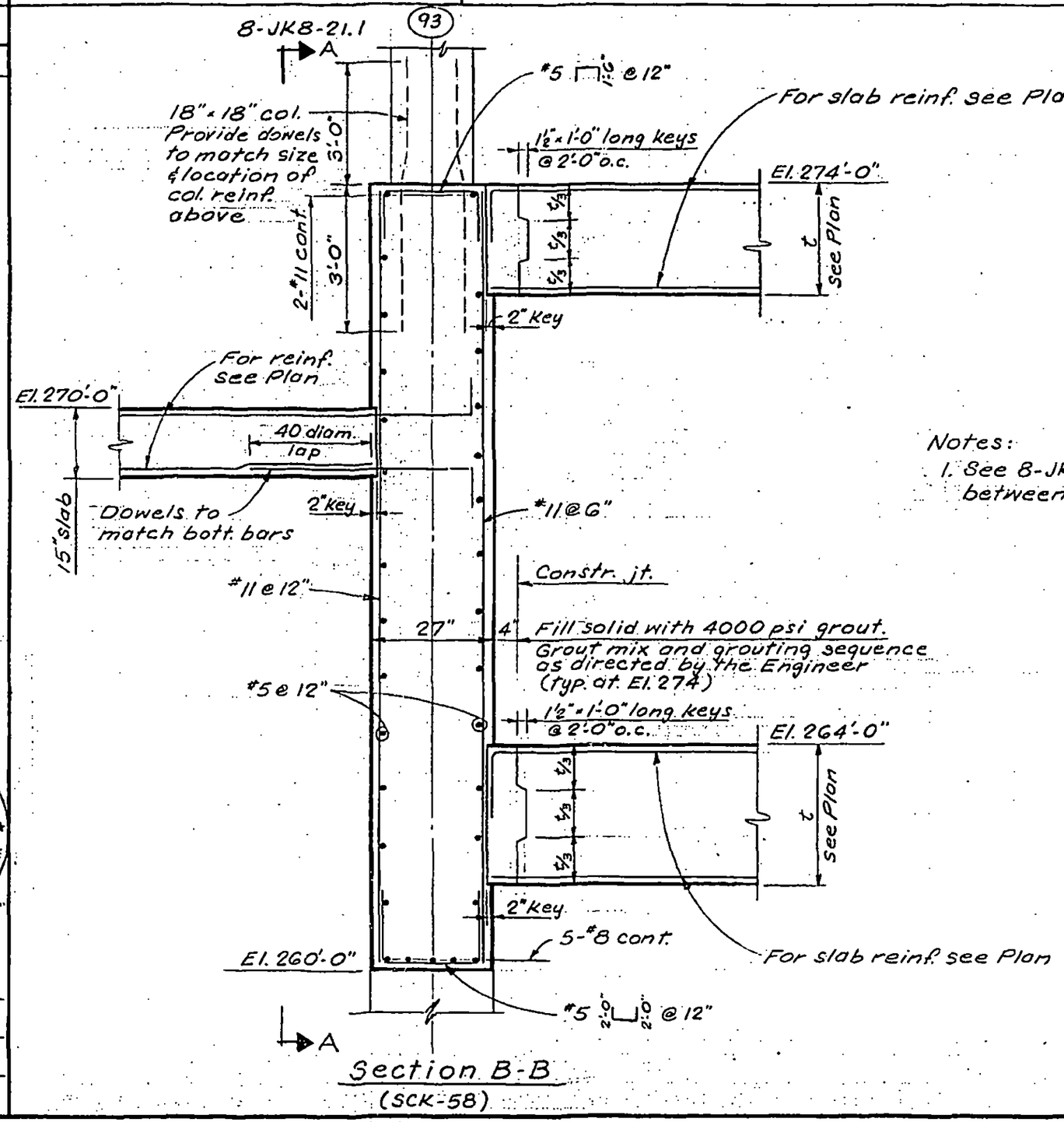

Section B-B
(SCK-58)

Notes:
1. See 8-JK6-2.3 for conn. detail between C.I.P. wall & slurry wall.

LICENSED PROFESSIONAL ENGINEER
LESLIE E. ROBERTSON
No. 34369
UNIVERSITY OF THE STATE OF NEW YORK

DESIGNED N.M.
DRAWN S.C.
REVIEWED E.L.

8-JK8-21.2

SKILLING, HELLE, CHRISTIANSEN, ROBERTSON — Structural & Civil Engineers

PROJECT: THE WORLD TRADE CENTER | TITLE: SOUTH PROJECTION - SECTIONS | DATE: 7-9-68

REVISIONS

4-16-69 GEN. REV.

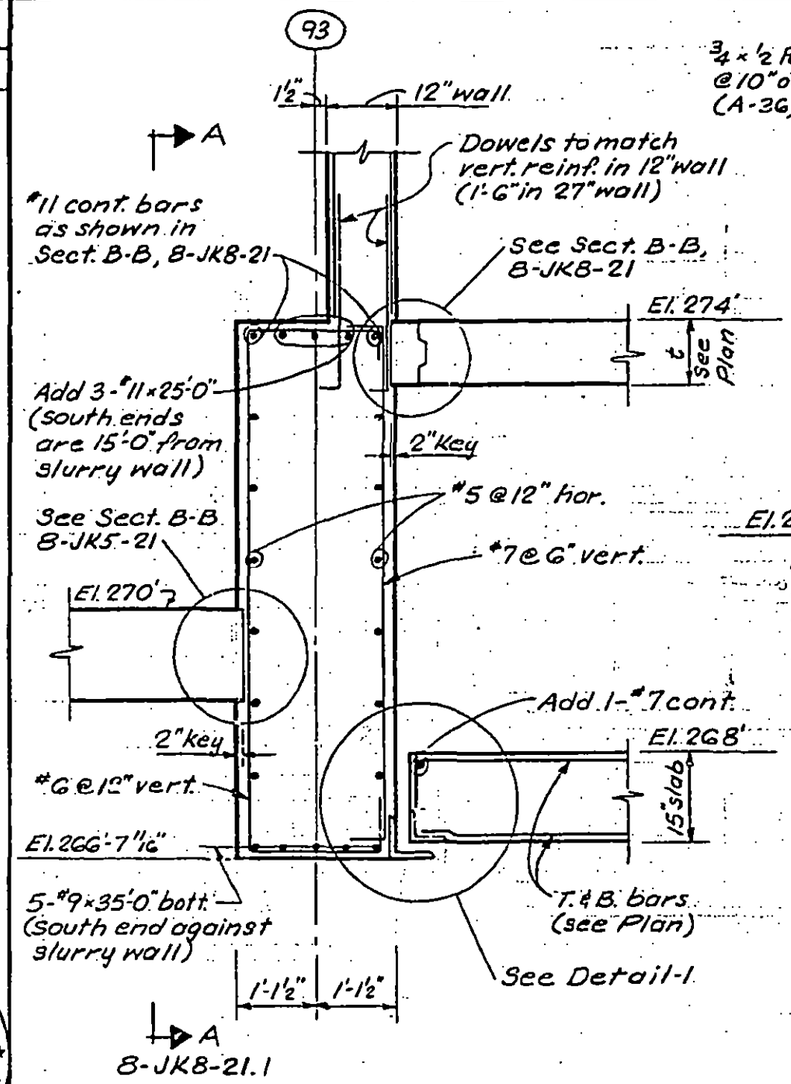

Section C-C
(SCK-58)

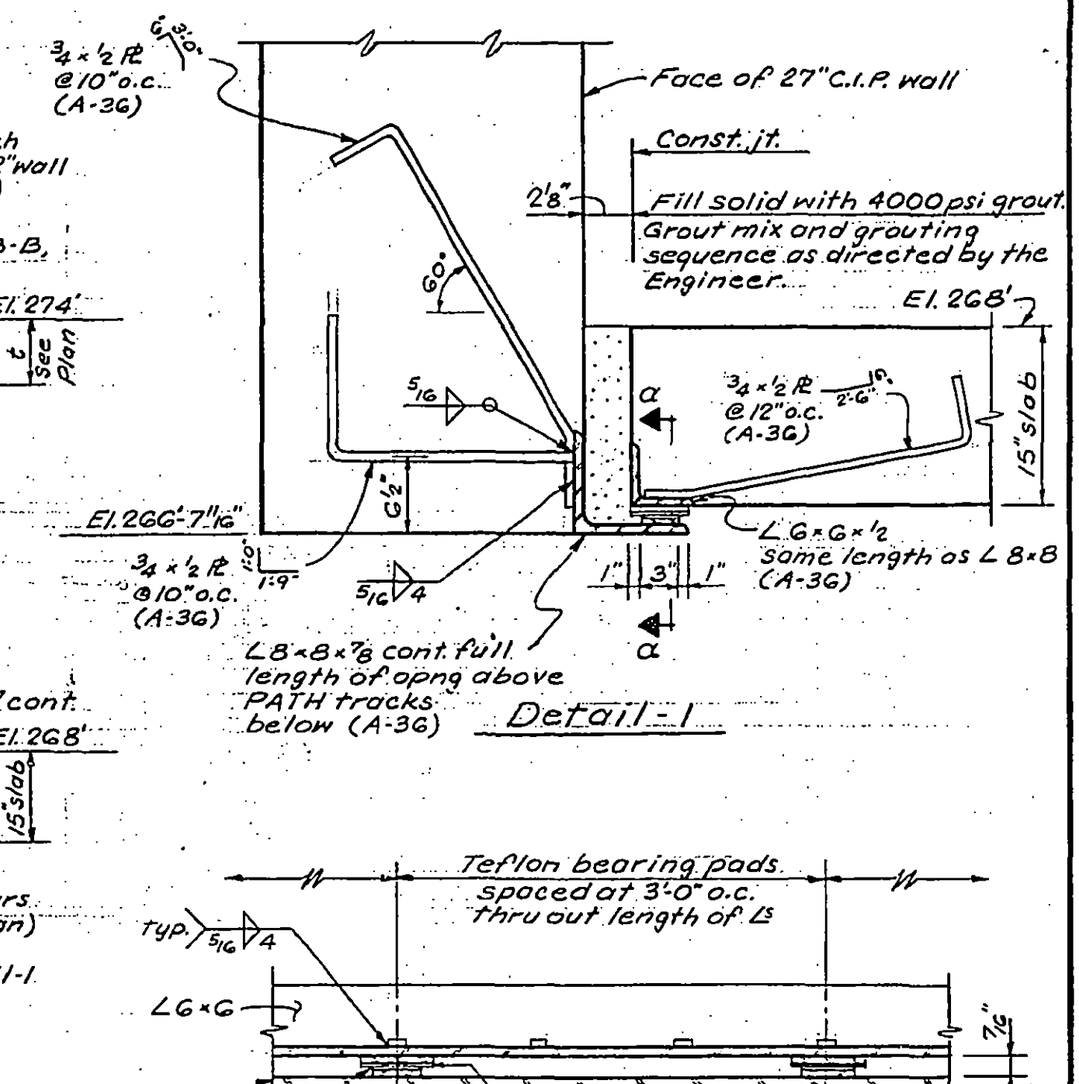

Detail-1

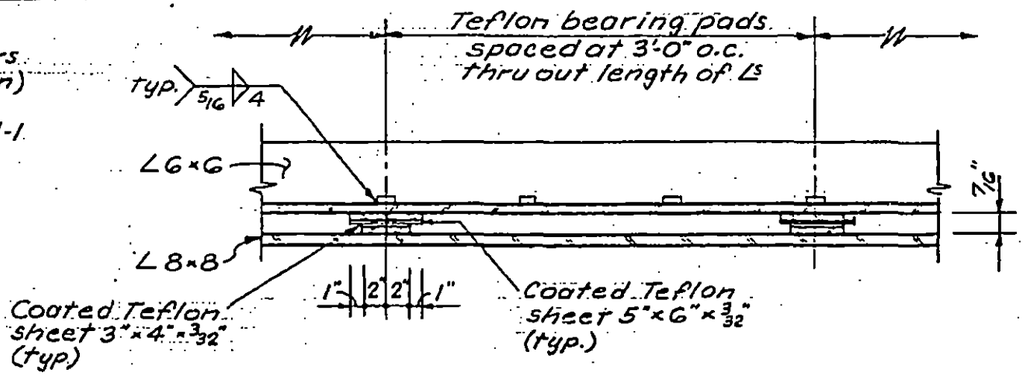

Section a-a

Notes:
1. See Specifications for welding.

LICENSED PROFESSIONAL ENGINEER
LESLIE E. ROBERTSON
No. 34360
UNIVERSITY OF THE STATE OF NEW YORK

DESIGNED N.M.
DRAWN S.C.
REVIEWED E.L.

8-JK8-21.3

SKILLING, HELLE, CHRISTIANSEN, ROBERTSON — Structural & Civil Engineers

PROJECT THE WORLD TRADE CENTER | TITLE SOUTH PROJECTION-SECTIONS | DATE 7-9-68

REVISIONS

4-16-69 GEN. REV.

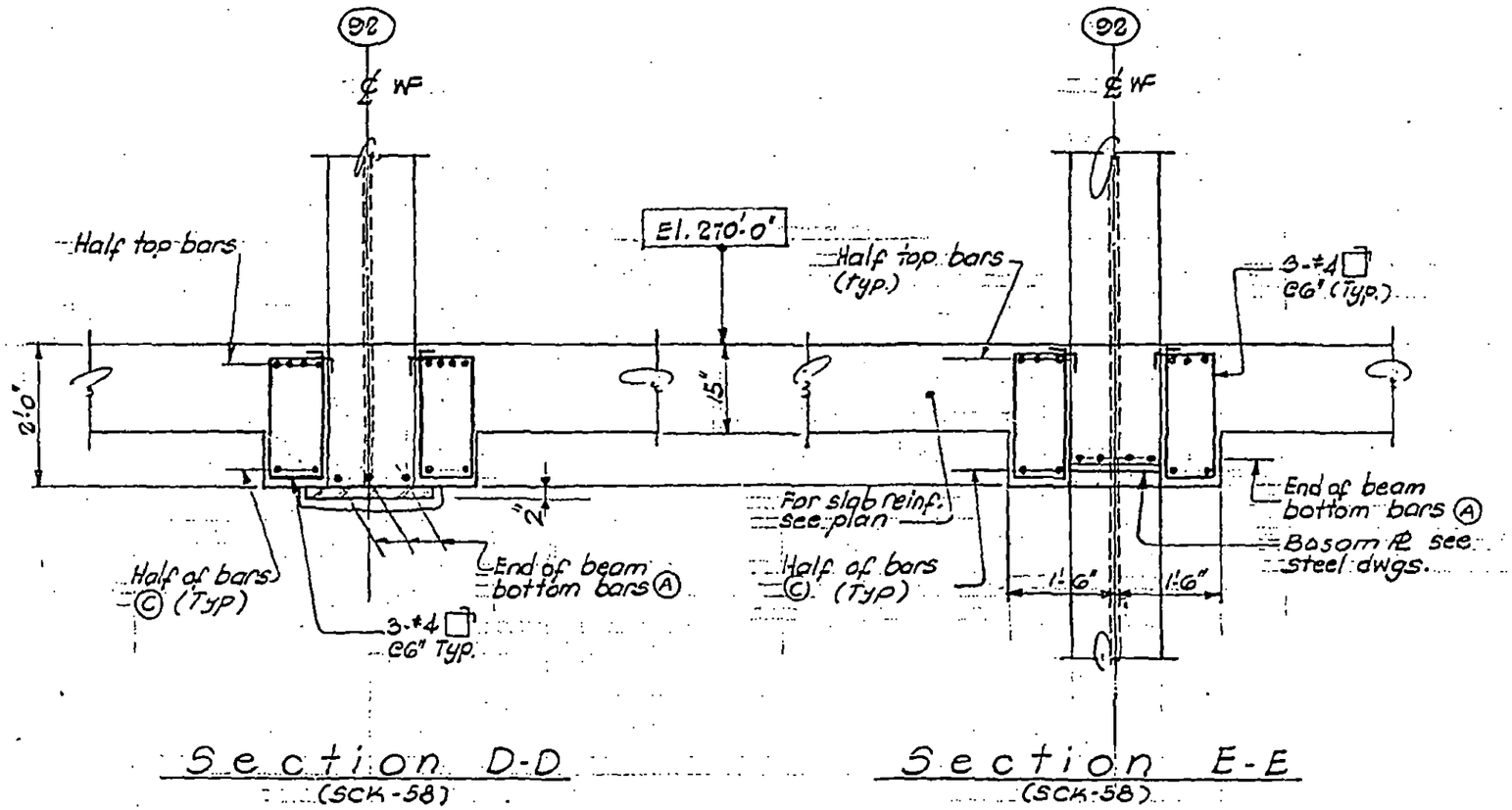

Section D-D
(SCK-58)

Section E-E
(SCK-58)

Note:
For beam reinf. see schedule on B-JK5-22.

LICENSED PROFESSIONAL ENGINEER
LESLIE E. ROBERTSON
No. 34360
UNIVERSITY OF THE STATE OF NEW YORK

DESIGNED N.M.
DRAWN S.T.M.
REVIEWED

8-JK8-21.4

SKILLING, HELLE, CHRISTIANSEN, ROBERTSON — Structural & Civil Engineers

PROJECT: THE WORLD TRADE CENTER | TITLE: SOUTH PROJECTION SECTIONS | DATE: 7-9-68

REVISIONS

4-16-69 GEN. REV.
1-23-70
2-27-70
6-30-70 GEN. REV.

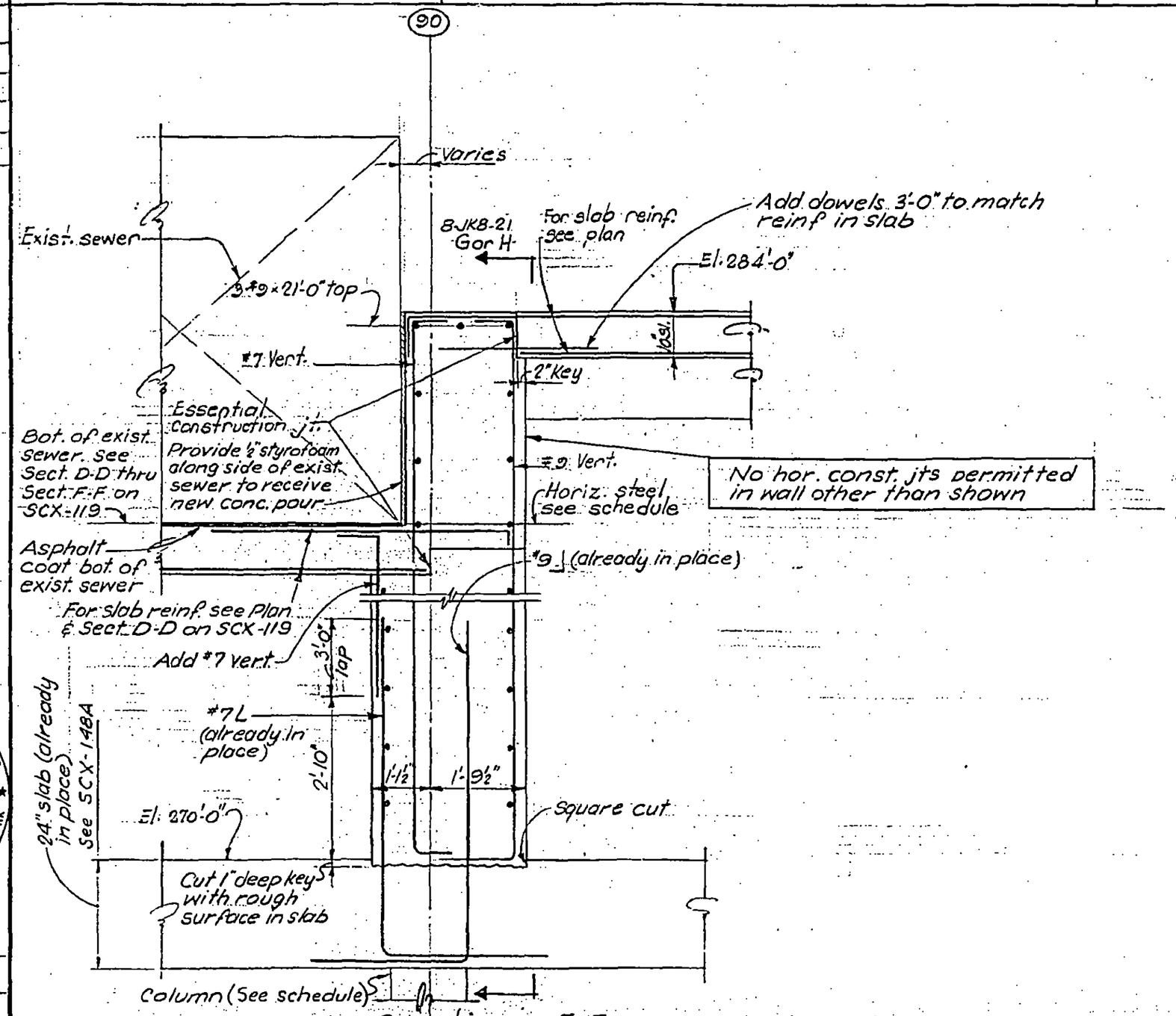

Section F-F
(SCK-58)

LICENSED PROFESSIONAL ENGINEER
LESLIE E. ROBERTSON
No. 34360
UNIVERSITY OF THE STATE OF NEW YORK

DESIGNED N.M.
DRAWN S.T.M.
REVIEWED E.L.

8-JK8-21.5

SKILLING, HELLE, CHRISTIANSEN, ROBERTSON — Structural & Civil Engineers

PROJECT THE WORLD TRADE CENTER | TITLE SOUTH PROJECTION - SECTIONS | DATE 7-9-68

REVISIONS

4-16-69 GEN. REV.

1-23-70

2-27-70

6-30-70 GEN. REV.

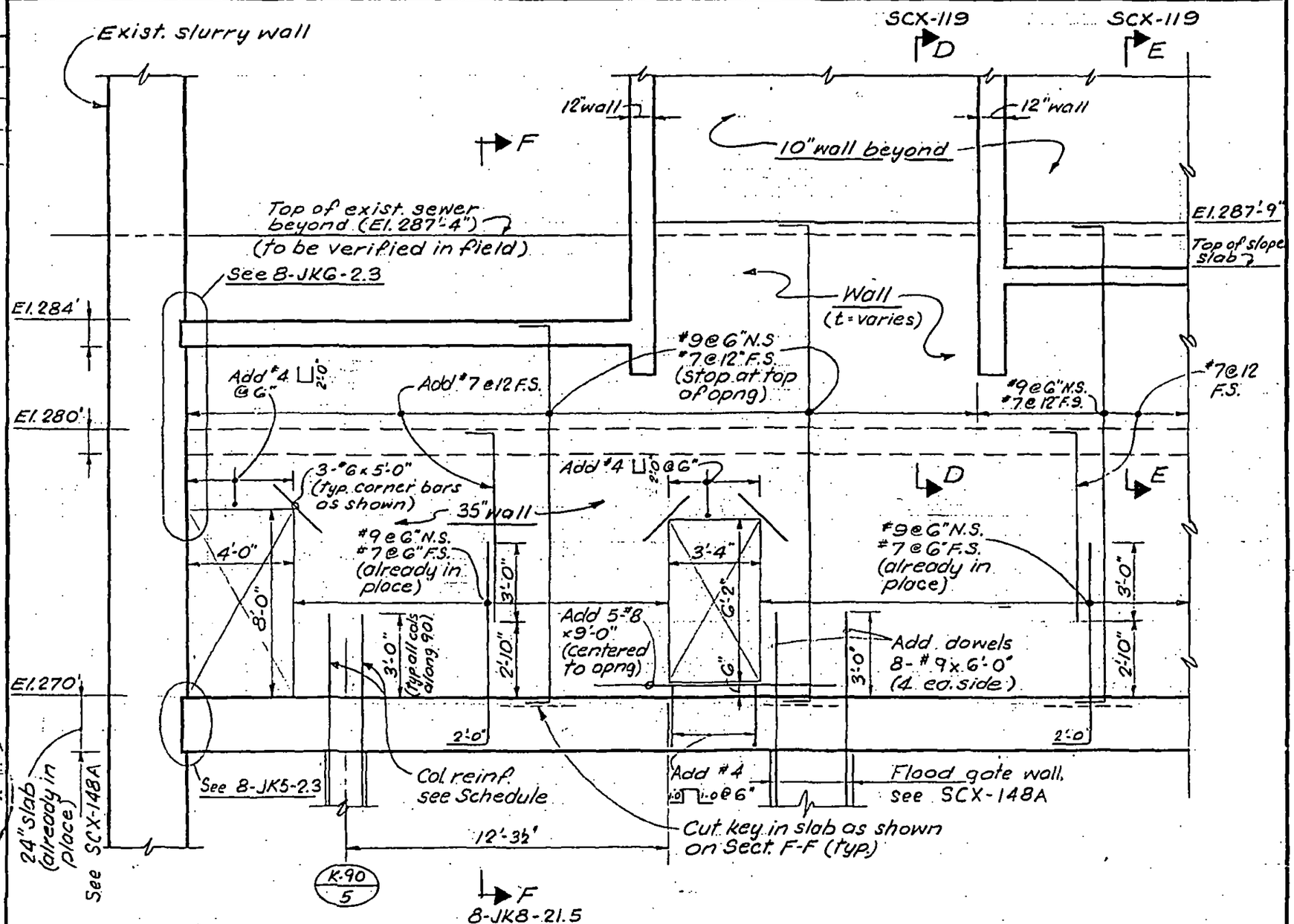

Section G-G
(SCK-58)

Note: See Archt. Dwgs for detail at door jambs.

LICENSED PROFESSIONAL ENGINEER — LESLIE E. ROBERTSON — No. 34360 — UNIVERSITY OF THE STATE OF NEW YORK

DESIGNED N.M.

DRAWN S.C.

REVIEWED E.L.

8-JK8-21.6

SKILLING, HELLE, CHRISTIANSEN, ROBERTSON — Structural & Civil Engineers

PROJECT THE WORLD TRADE CENTER | TITLE SOUTH PROJECTION - SECTIONS | DATE 7-9-68

REVISIONS
- 4-16-69 GEN. REV.
- 1-23-70
- 2-27-70
- 6-30-70 GEN. REV.

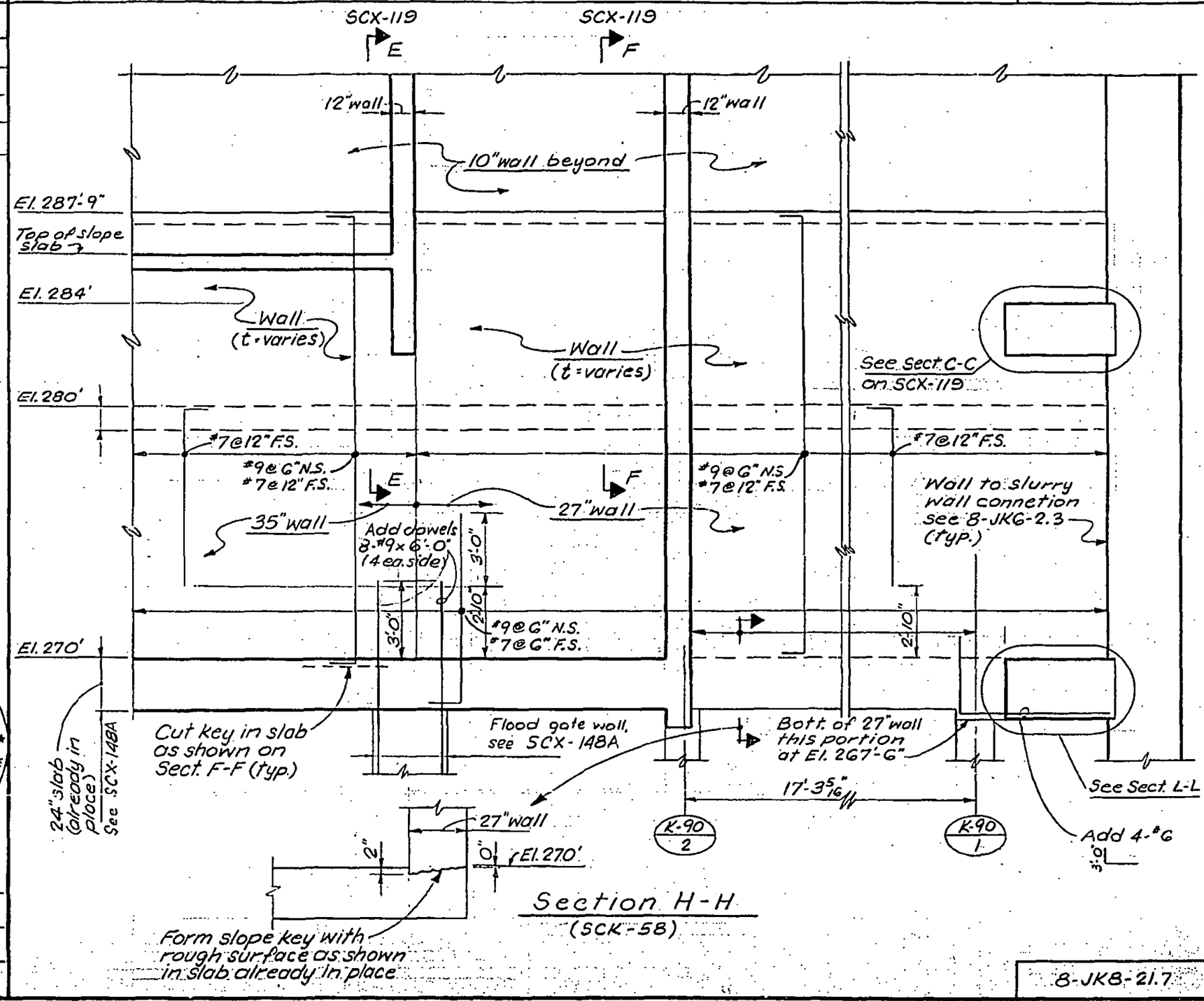

LICENSED PROFESSIONAL ENGINEER — LESLIE E. ROBERTSON — No. 34360 — UNIVERSITY OF THE STATE OF NEW YORK

DESIGNED N.M.
DRAWN S.C.
REVIEWED E.L.

8-JK8-21.7

SKILLING, HELLE, CHRISTIANSEN, ROBERTSON Structural & Civil Engineers

PROJECT THE WORLD TRADE CENTER | TITLE SOUTH PROJECTION – SECTIONS | DATE 4-16-69

REVISIONS

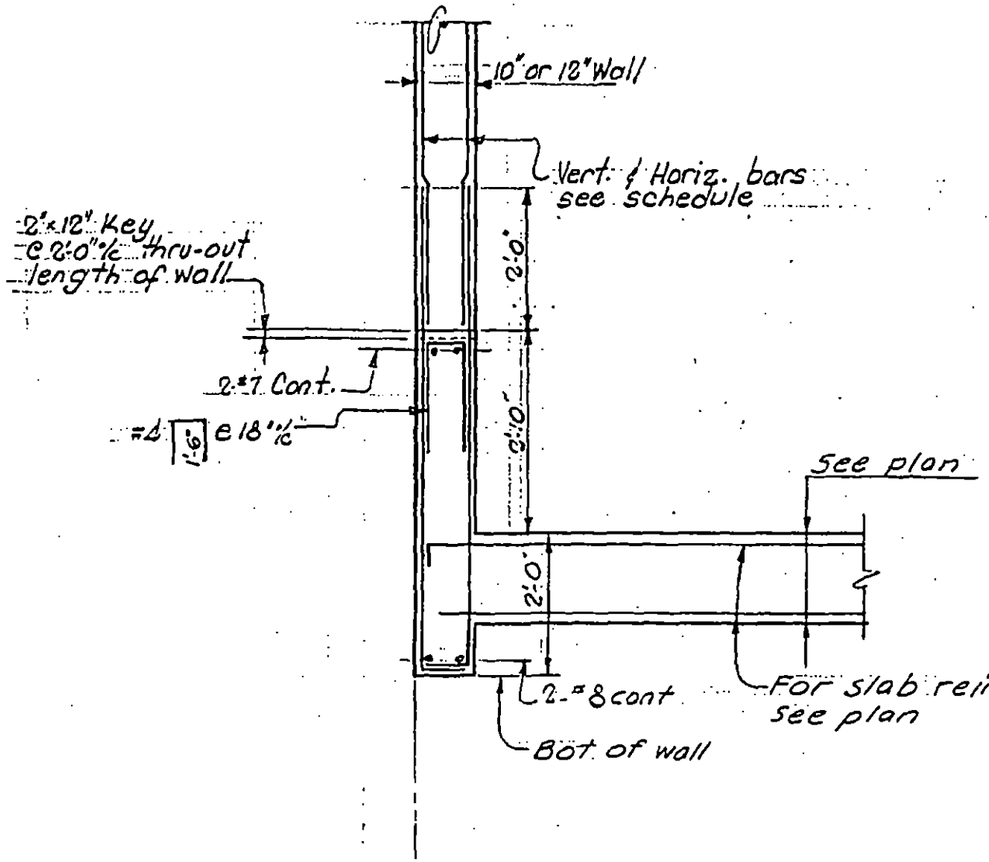

Section J-J
(SCK-58)

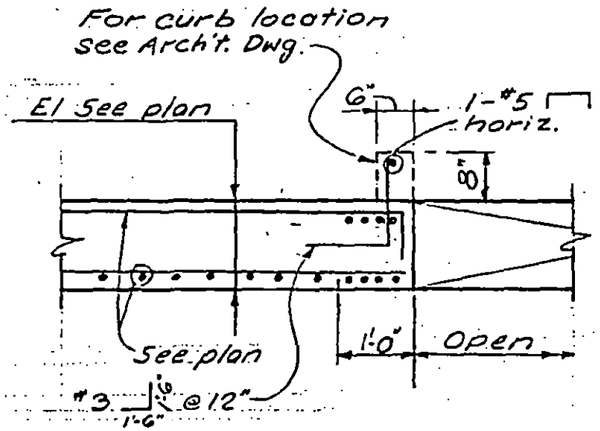

Section K-K
(SCK-58)

LICENSED PROFESSIONAL ENGINEER
LESLIE E. ROBERTSON
No. 34360
UNIVERSITY OF THE STATE OF NEW YORK

DESIGNED N.M.
DRAWN A.L.FRANQUI
REVIEWED E.L.

8-JK8-21.8

SKILLING, HELLE, CHRISTIANSEN, ROBERTSON — Structural & Civil Engineers

PROJECT: THE WORLD TRADE CENTER | TITLE: SOUTH PROJECTION - SECTIONS | DATE: 4-16-69

REVISIONS

1-23-70

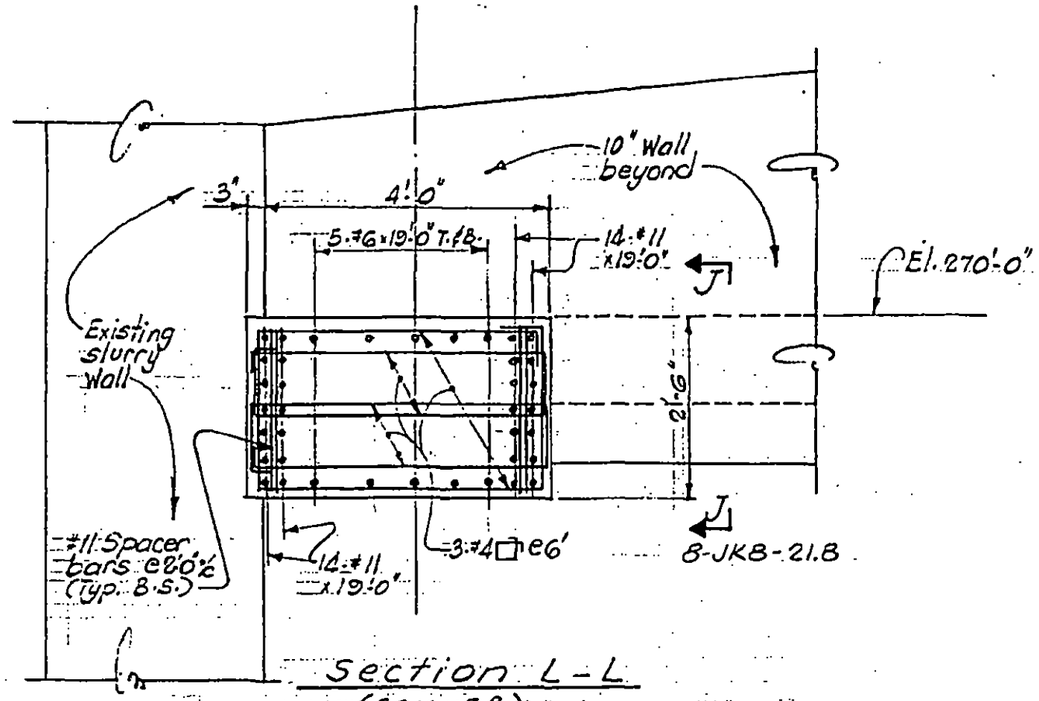

Section L-L
(SCK-58)

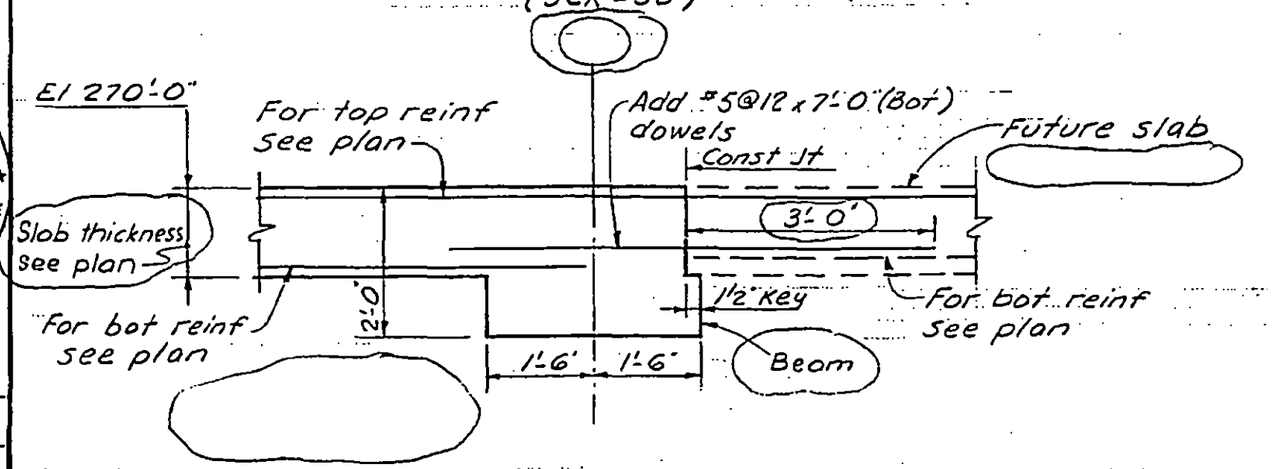

Section M-M
(SCK-58)

8-JK8-21.9

LICENSED PROFESSIONAL ENGINEER — LESLIE E. ROBERTSON — No. 34360 — UNIVERSITY OF THE STATE OF NEW YORK

DESIGNED: N.M.
DRAWN: S.T.M.
REVIEWED: E.L.

SKILLING, HELLE, CHRISTIANSEN, ROBERTSON — Structural & Civil Engineers

PROJECT: THE WORLD TRADE CENTER | TITLE: SOUTH PROJECTION - SECTIONS | DATE: 1-23-70

REVISIONS

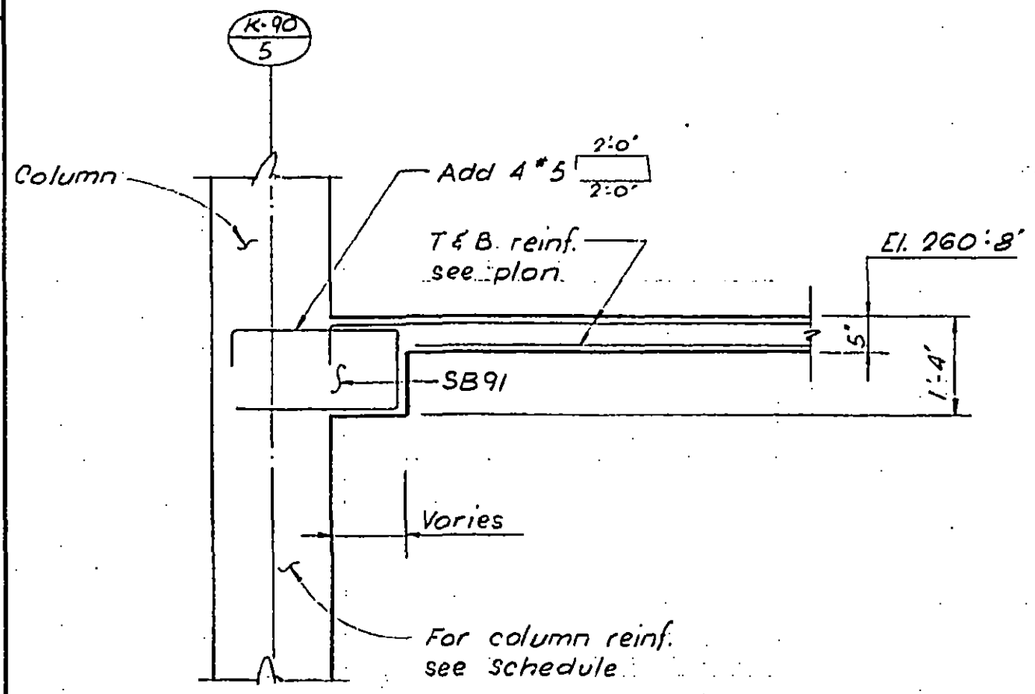

SECTION N-N
(½" - 1'-0")

LICENSED PROFESSIONAL ENGINEER
LESLIE E. ROBERTSON
No. 34360
UNIVERSITY OF THE STATE OF NEW YORK

DESIGNED

DRAWN: T. Terrelonge

REVIEWED: E. L

8-JK8-21.10

SKILLING, HELLE, CHRISTIANSEN, ROBERTSON — Structural & Civil Engineers

PROJECT: THE WORLD TRADE CENTER | TITLE: SOUTH PROJECTION - SECTIONS. | DATE: 1-23-70

REVISIONS

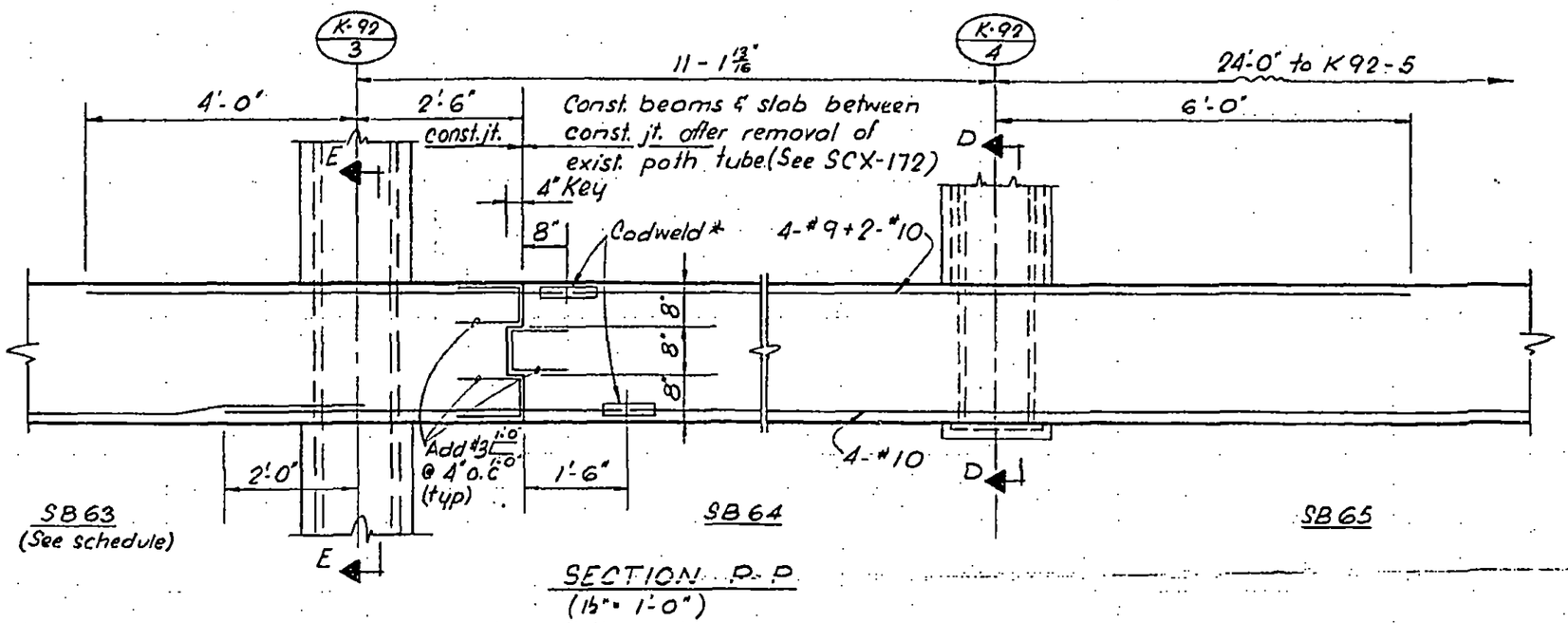

SECTION P-P
(1½" = 1'-0")

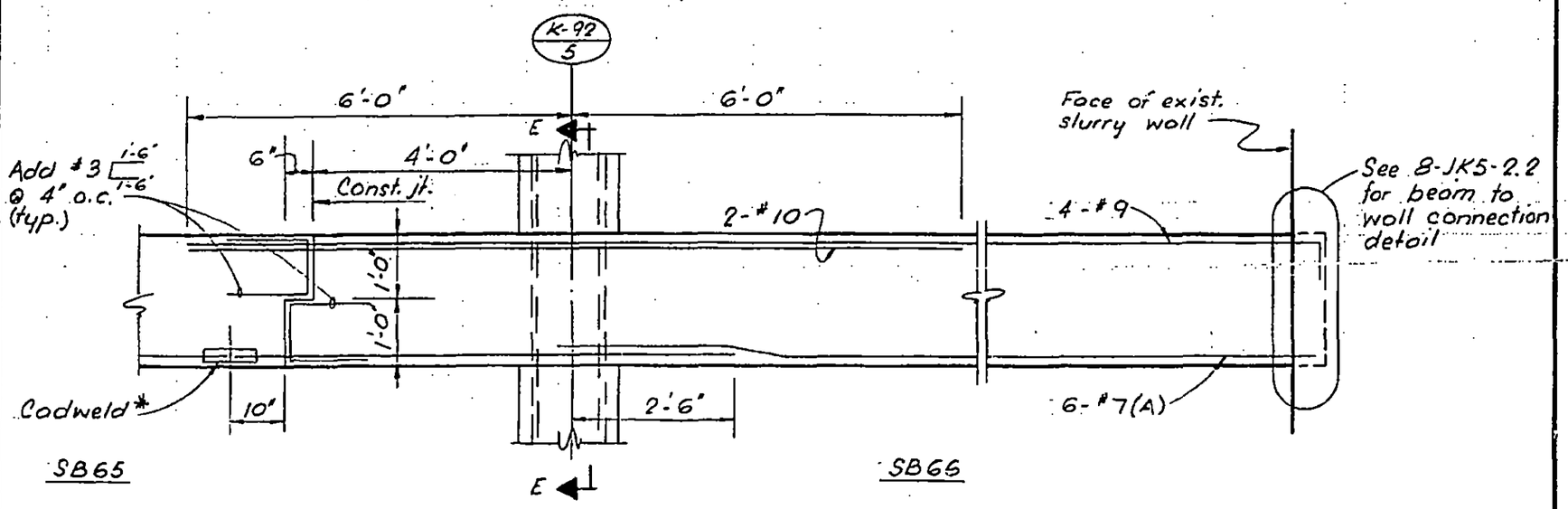

SECTION P-P (cont.)
(1½" = 1'-0")

Note: 1. * - splice top and bottom bars as shown with T- series Codweld splice.
2. See schedule on 8-JK5-22 for beam size and stirrups.

LICENSED PROFESSIONAL ENGINEER LESLIE E. ROBERTSON No. 34360 UNIVERSITY OF THE STATE OF NEW YORK

DESIGNED

DRAWN T.T

REVIEWED E.L.

8-JK8-21.11

SKILLING, HELLE, CHRISTIANSEN, ROBERTSON — Structural & Civil Engineers

PROJECT THE WORLD TRADE CENTER | TITLE SOUTH PROJECTION - SECTIONS | DATE 2-16-70

REVISIONS

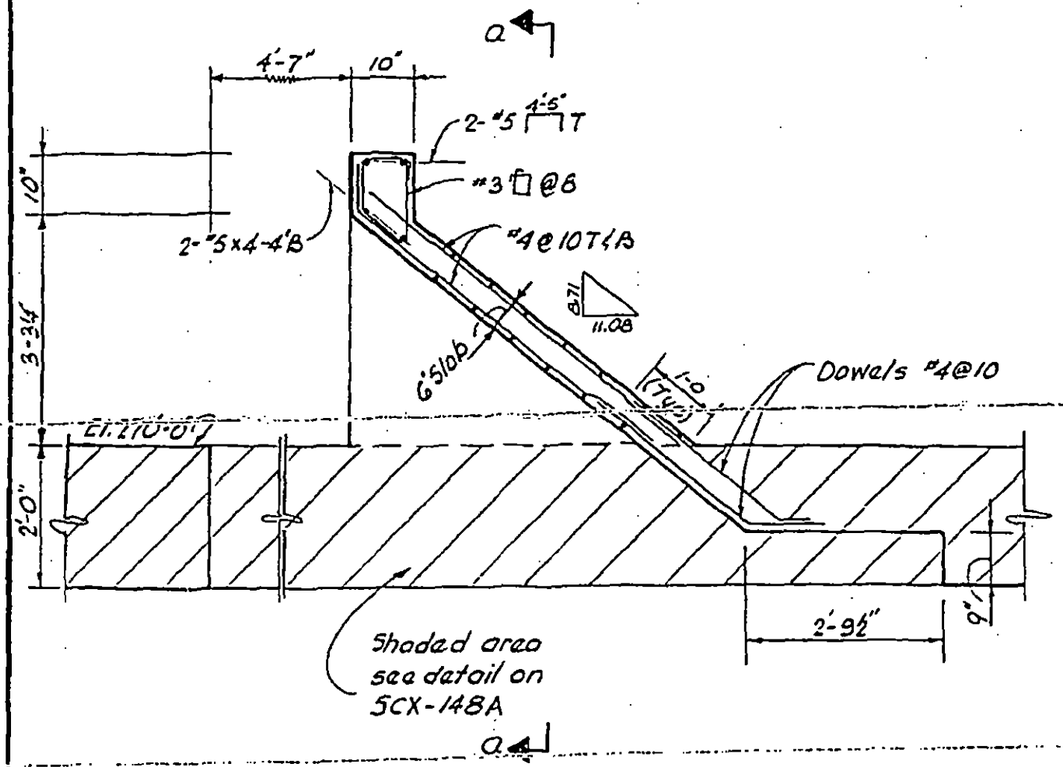

SECTION Q-Q
½" = 1'-0

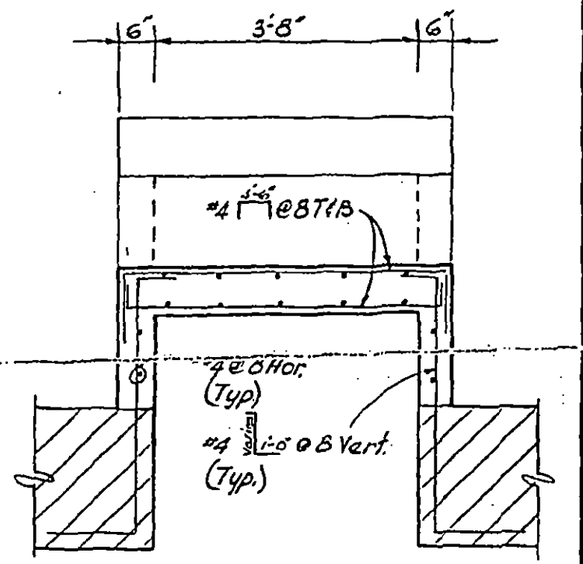

SECTION a-a
½" = 1'-0"

LICENSED PROFESSIONAL ENGINEER
LESLIE E. ROBERTSON
No. 34360
UNIVERSITY OF THE STATE OF NEW YORK

DESIGNED

DRAWN D. Huggins

REVIEWED E.L.

R-IV-B-91.10

SKILLING, HELLE, CHRISTIANSEN, ROBERTSON — Structural & Civil Engineers

PROJECT: THE WORLD TRADE CENTER | TITLE: SOUTH PROJECTION – SECTIONS | DATE: 2-27-70

REVISIONS
8-28-70

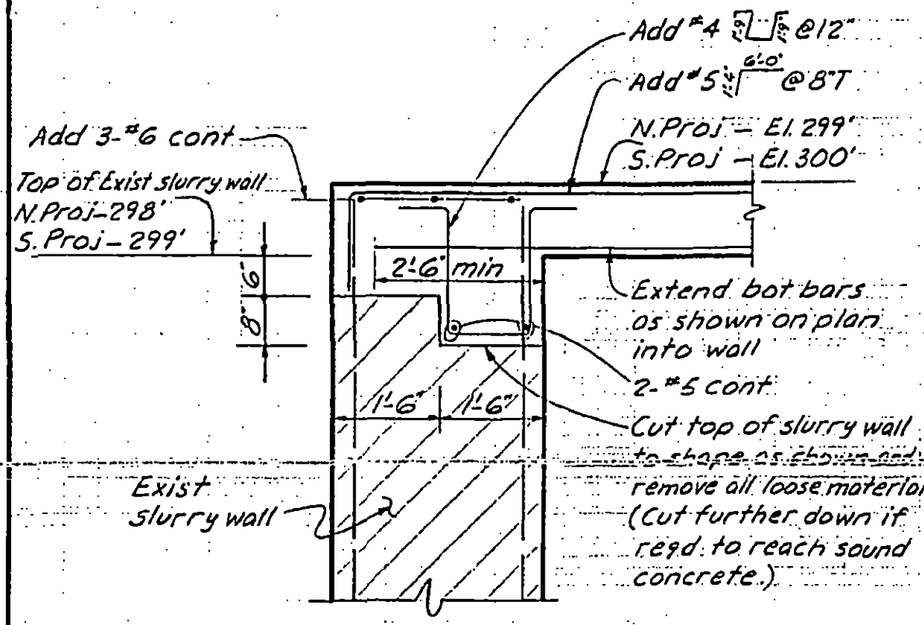

SECTION R-R
(1/2"=1'-0")

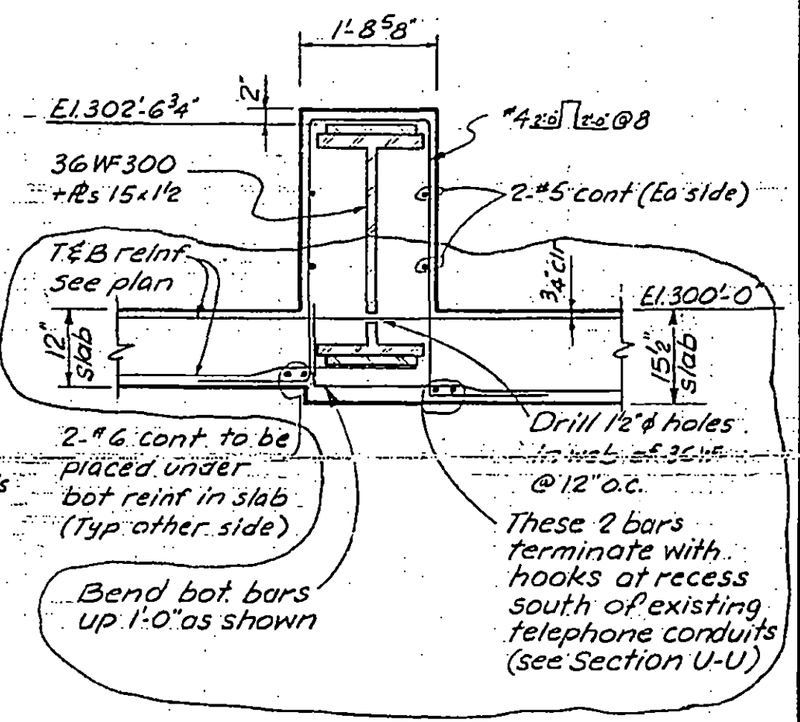

SECTION S-S
(1/2"=1'-0")

LICENSED PROFESSIONAL ENGINEER
LESLIE E. ROBERTSON
No. 34360
UNIVERSITY OF THE STATE OF NEW YORK

DESIGNED

DRAWN
A.L.F.

REVIEWED
E.L.

8-1K8-21.13

SKILLING, HELLE, CHRISTIANSEN, ROBERTSON — Structural & Civil Engineers

PROJECT: THE WORLD TRADE CENTER | TITLE: SOUTH PROJECTION - SECTIONS | DATE: 4-9-70

REVISIONS

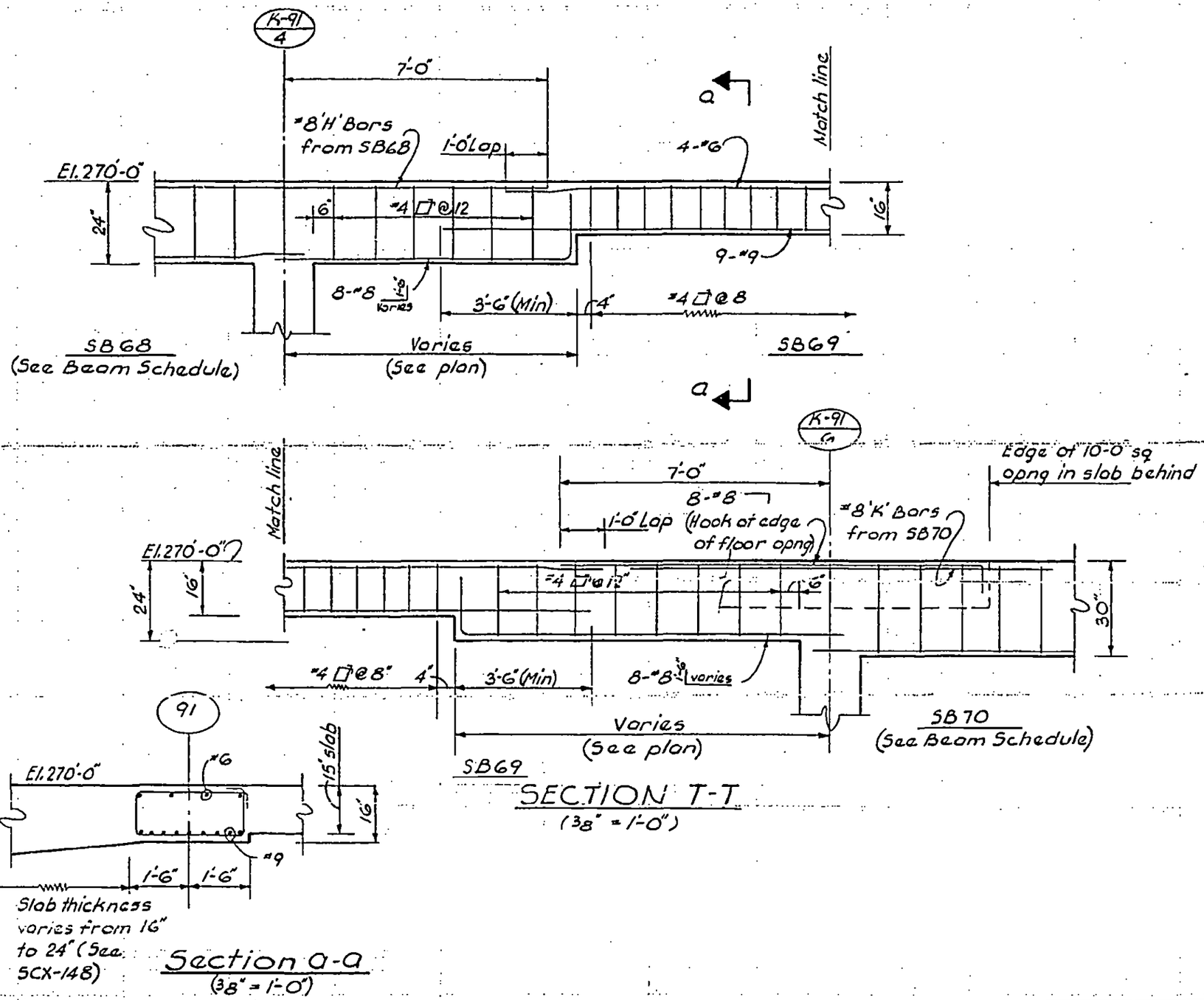

LICENSED PROFESSIONAL ENGINEER — LESLIE E. ROBERTSON — No. 34360 — UNIVERSITY OF THE STATE OF NEW YORK

DESIGNED

DRAWN D. Huggins

REVIEWED E.L.

8-1K 8-21-14

SKILLING, HELLE, CHRISTIANSEN ROBERTSON — Structural & Civil Engineers

PROJECT: THE WORLD TRADE CENTER | TITLE: SOUTH PROJECTION - SECTIONS | DATE: 8-28-70

REVISIONS

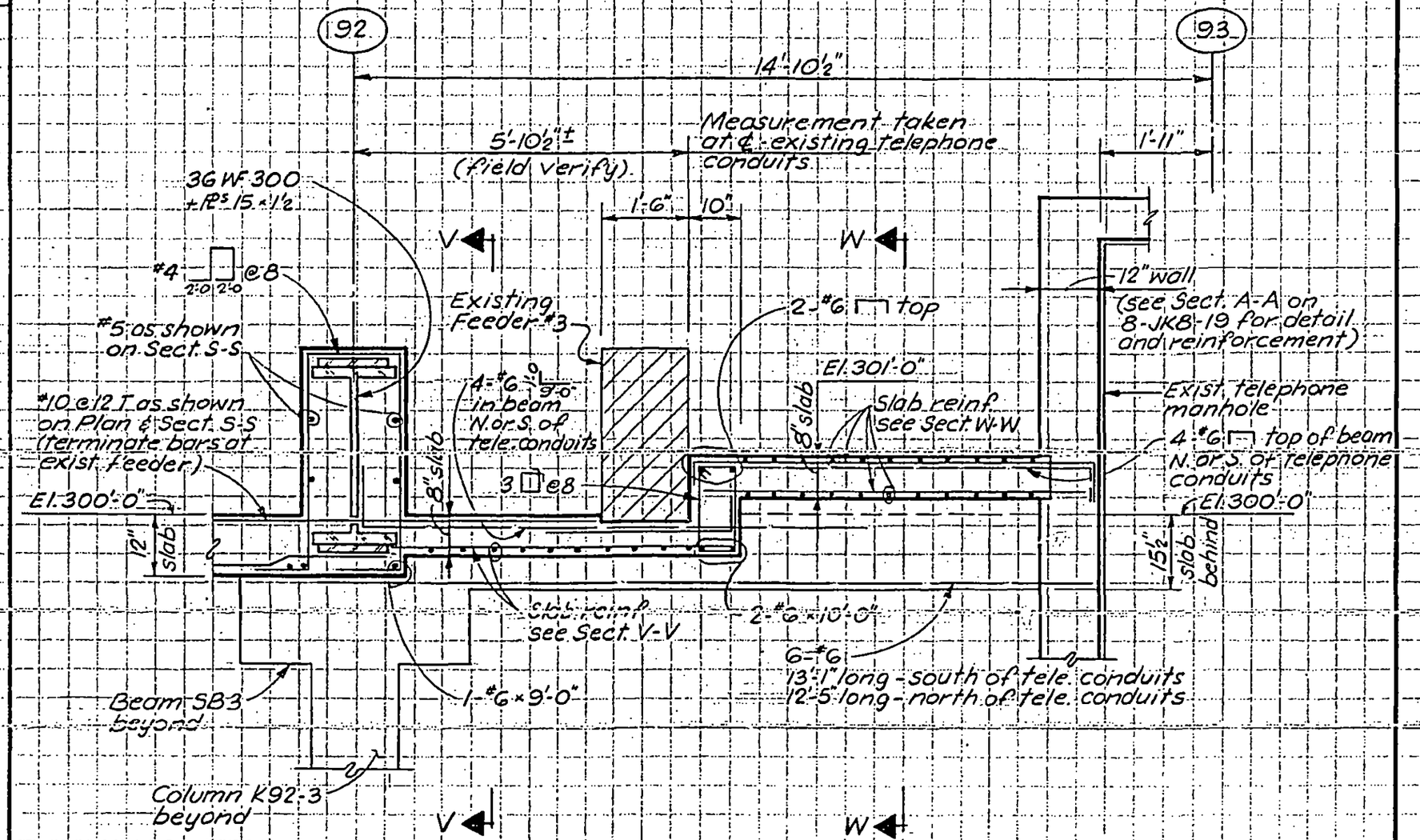

LICENSED PROFESSIONAL ENGINEER — LESLIE E. ROBERTSON — No. 34360 — UNIVERSITY OF THE STATE OF NEW YORK

DESIGNED

Section U-U

(½" = 1'-0")

SKILLING, HELLE, CHRISTIANSEN, ROBERTSON — Structural & Civil Engineers

PROJECT: THE WORLD TRADE CENTER | TITLE: SOUTH PROJECTION - SECTIONS | DATE: 8-28-70

REVISIONS

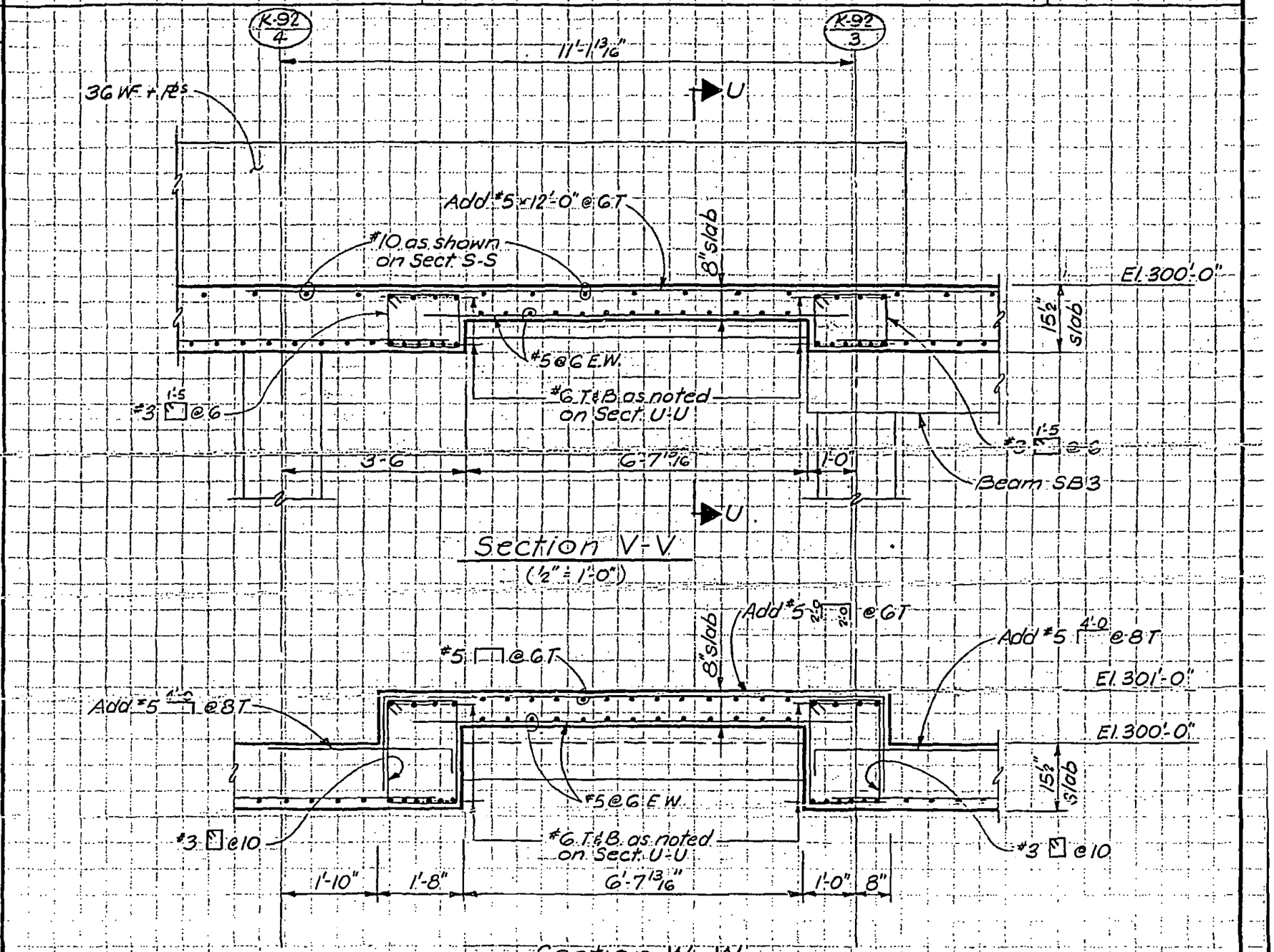

LICENSED PROFESSIONAL ENGINEER — LESLIE E. ROBERTSON — No. 34360 — UNIVERSITY OF THE STATE OF NEW YORK

DESIGNED

DRAWN: S.C.

REVIEWED: E.L.

R-IKA-21-IC

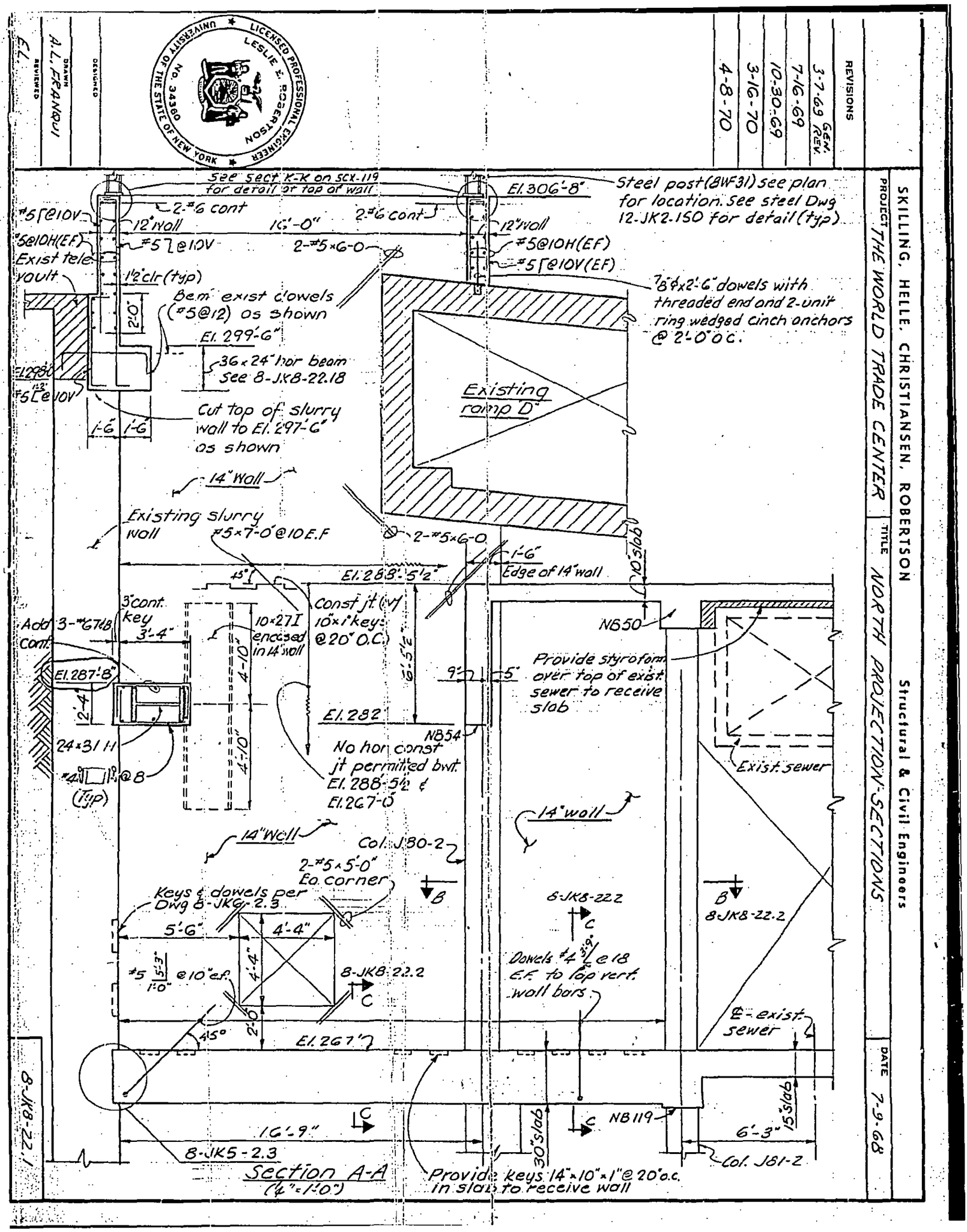

REVISIONS	DATE
3-7-69 GEN. REV.	
7-16-69	
10-30-69	
3-16-70	
4-8-70	

DESIGNED

DRAWN A.L. FRANQUI

REVIEWED

LICENSED PROFESSIONAL ENGINEER LESLIE E. ROBERTSON NO. 34380 UNIVERSITY OF THE STATE OF NEW YORK

SKILLING, HELLE, CHRISTIANSEN, ROBERTSON Structural & Civil Engineers

PROJECT THE WORLD TRADE CENTER

TITLE NORTH PROJECTION-SECTIONS

DATE 7-9-68

8-JK8-22.1

SKILLING, HELLE, CHRISTIANSEN, ROBERTSON — Structural & Civil Engineers

PROJECT: THE WORLD TRADE CENTER | TITLE: NORTH PROJECTION-SECTIONS | DATE: 7-9-68

REVISIONS
3-7-69
7-16-69

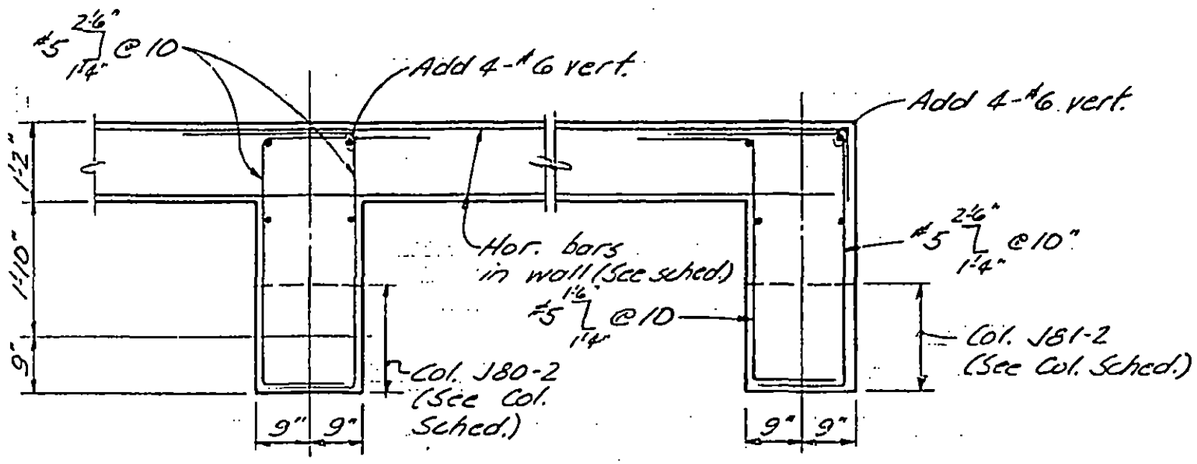

Section B-B
(½"=1'-0")

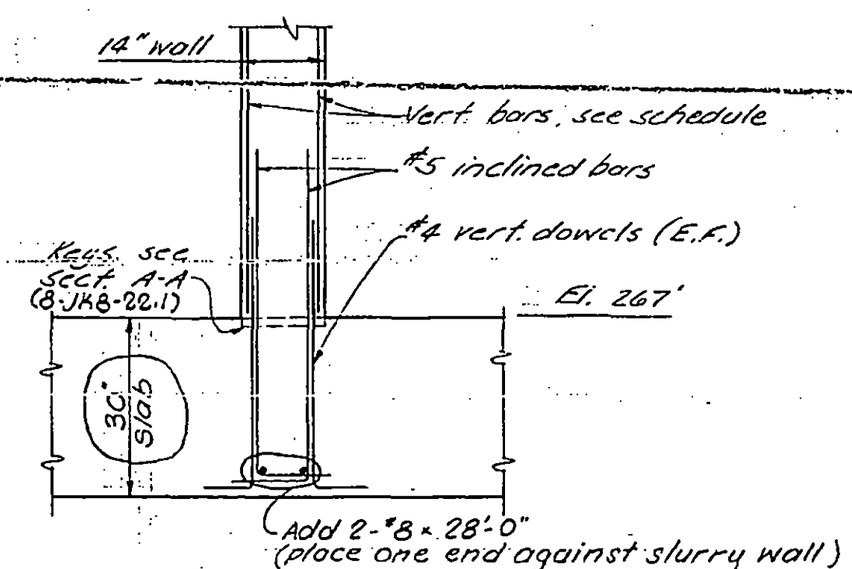

Section C-C
(½"=1'-0")

Note:
See 8-JK8-22.1 for location of sections.

LICENSED PROFESSIONAL ENGINEER
LESLIE E. ROBERTSON
No. 34360
UNIVERSITY OF THE STATE OF NEW YORK

DESIGNED
DRAWN J. Adams
REVIEWED E.L.

8-JK8-22.2

SKILLING, HELLE, CHRISTIANSEN, ROBERTSON — Structural & Civil Engineers

PROJECT THE WORLD TRADE CENTER | TITLE NORTH PROJECTION - SECTIONS | DATE 7-9-68

REVISIONS

3-7-69 GEN. REV.

10-30-69

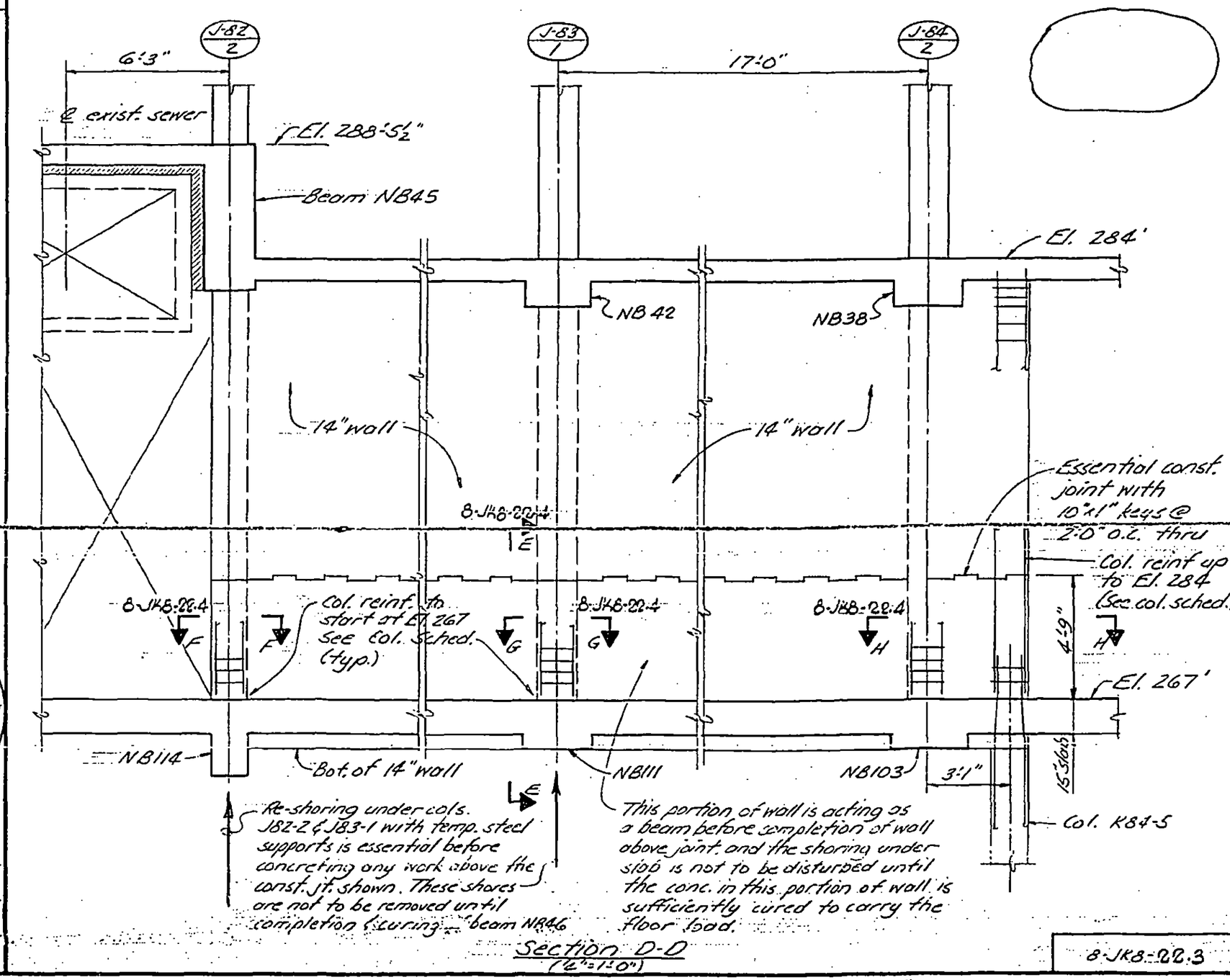

Section D-D
(½"=1'-0")

8-JK8-22.3

LICENSED PROFESSIONAL ENGINEER
LESLIE E. ROBERTSON
No. 34380
UNIVERSITY OF THE STATE OF NEW YORK

DESIGNED

DRAWN J. Adams

REVIEWED E.L.

SKILLING, HELLE, CHRISTIANSEN, ROBERTSON — Structural & Civil Engineers

PROJECT: THE WORLD TRADE CENTER | TITLE: NORTH PROJECTION - SECTIONS | DATE: 7-9-68

REVISIONS
- 3-7-69
- 7-16-69
- 10-30-69

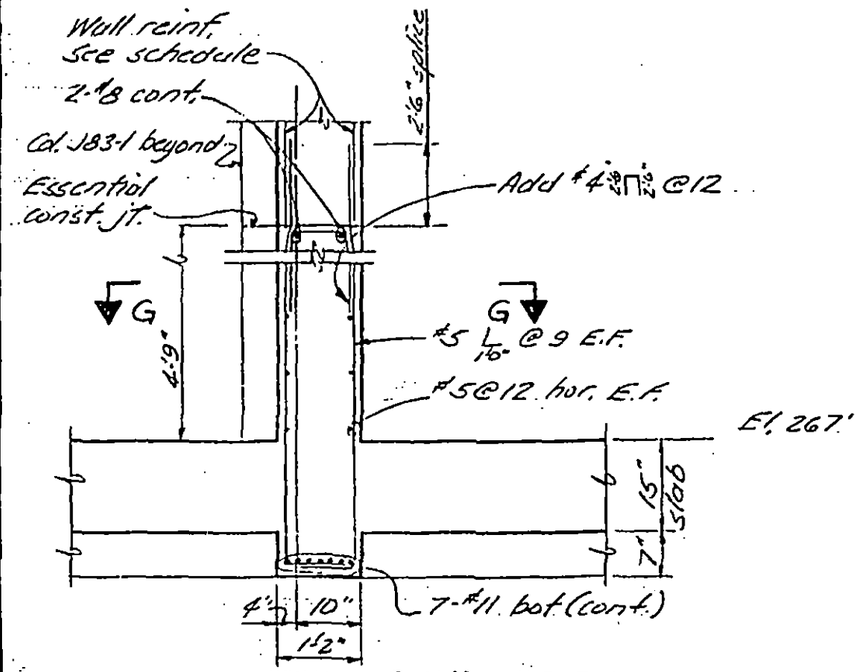

Section E-E
(½"=1'-0")

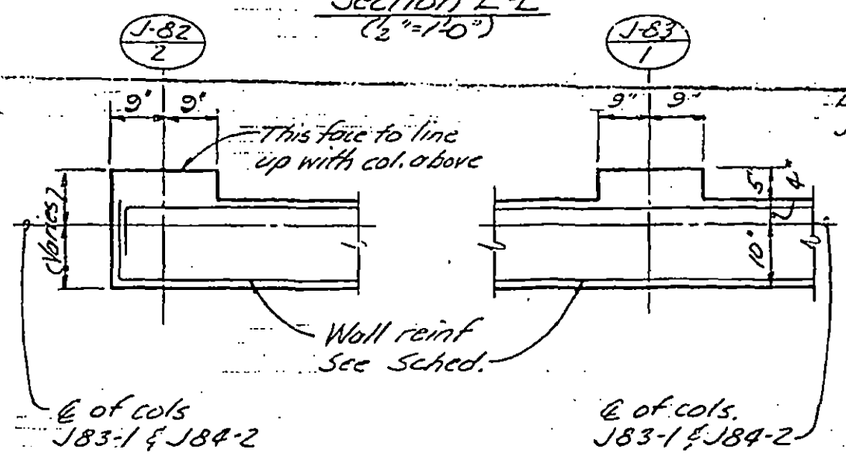

Section F-F
(½"=1'-0")

Section G-G
(½"=1'-0")

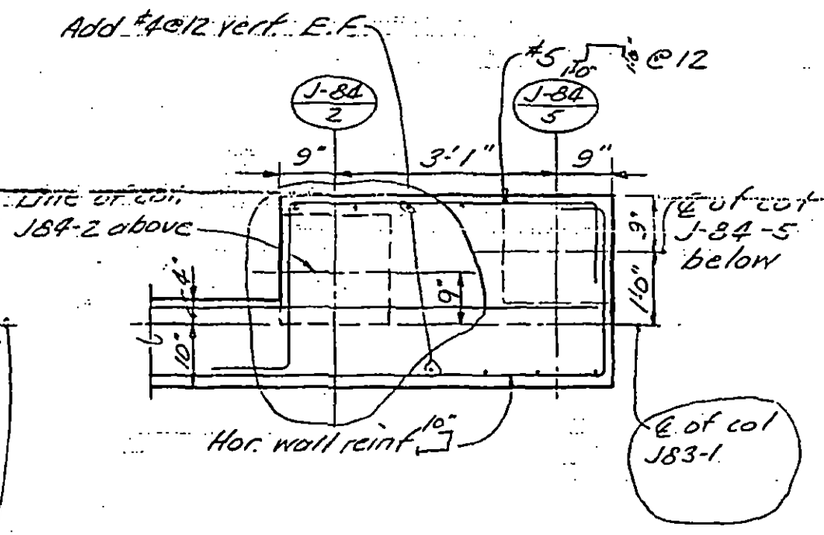

Section H-H
(½"=1'-0")

NOTE:
See 8-JK8-22.3 for location of sections

LICENSED PROFESSIONAL ENGINEER — LESLIE E. ROBERTSON — No. 34360 — UNIVERSITY OF THE STATE OF NEW YORK

DESIGNED

DRAWN: J. Adams

REVIEWED: E.L.

8-JK8-22.4

SKILLING, HELLE, CHRISTIANSEN, ROBERTSON — Structural & Civil Engineers

PROJECT: THE WORLD TRADE CENTER | TITLE: NORTH PROJECTION - SECTIONS | DATE: 7-9-68

REVISIONS
3-7-69.

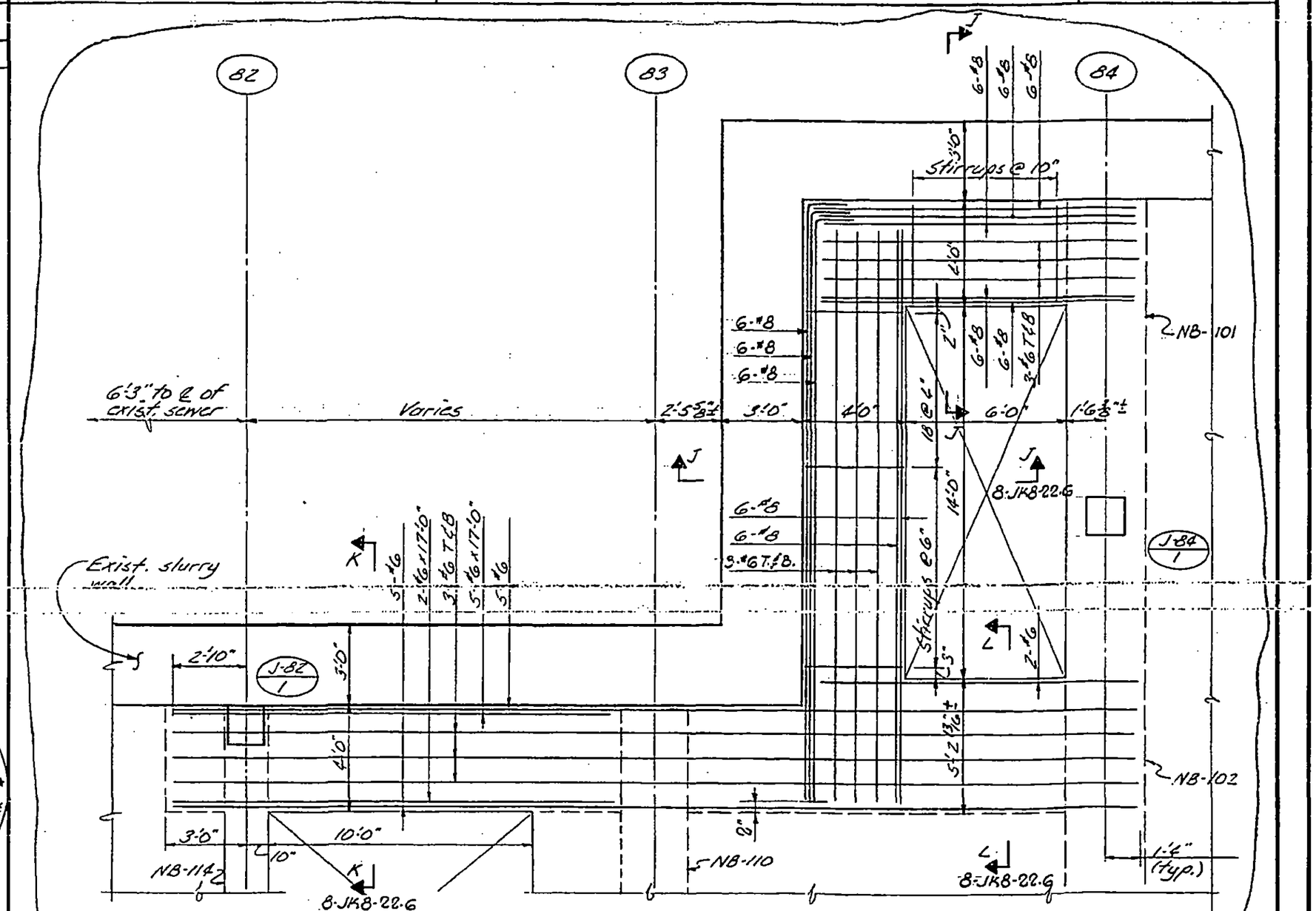

PART PLAN AT EL. 267'
(¼"=1'-0")

LICENSED PROFESSIONAL ENGINEER
LESLIE E. ROBERTSON
No. 34360
UNIVERSITY OF THE STATE OF NEW YORK

DESIGNED
DRAWN J.A.
REVIEWED E.L.

8-JK8-22.5

SKILLING, HELLE, CHRISTIANSEN, ROBERTSON — Structural & Civil Engineers

PROJECT: THE WORLD TRADE CENTER | TITLE: NORTH PROJECTION - SECTIONS | DATE: 3-7-69

REVISIONS

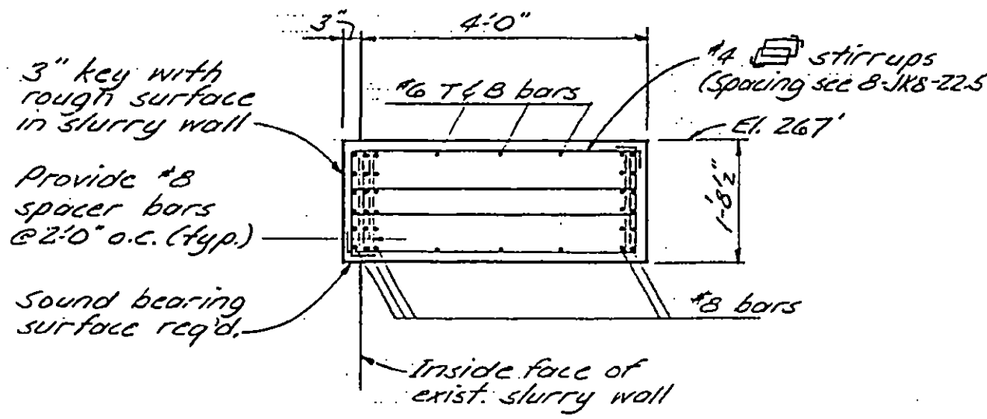

Section J-J
(½"=1'-0")

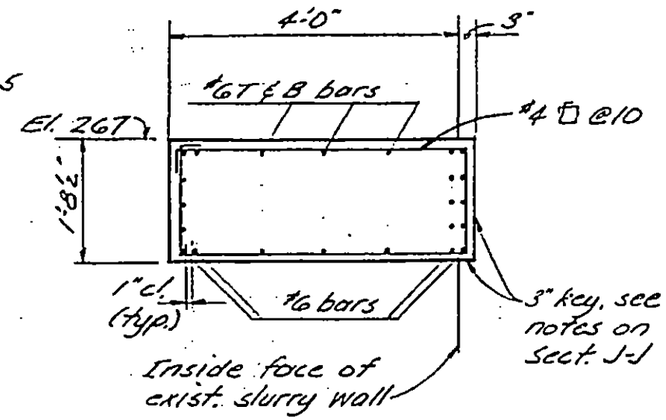

Section K-K
(½"=1'-0")

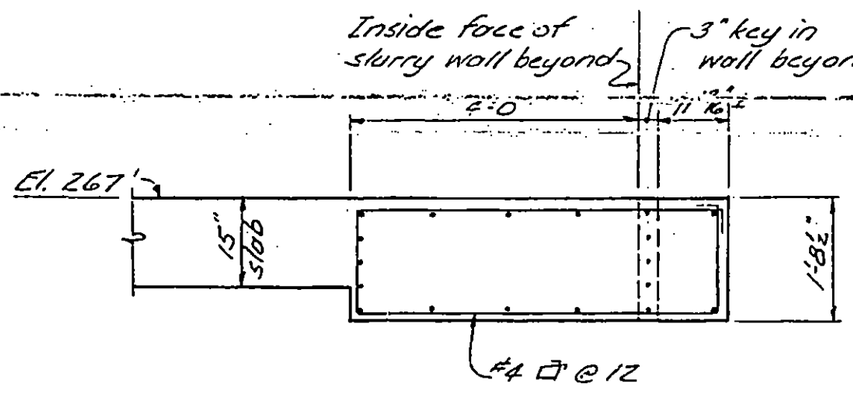

Section L-L
(½"=1'-0")

NOTE
See 8-JK8-22.5 for location of sections.

LICENSED PROFESSIONAL ENGINEER
LESLIE E. ROBERTSON
No. 34380
UNIVERSITY OF THE STATE OF NEW YORK

DESIGNED

DRAWN J.A.

REVIEWED E.L.

8-JK8-22.6

SKILLING, HELLE, CHRISTIANSEN, ROBERTSON — Structural & Civil Engineers

PROJECT: THE WORLD TRADE CENTER | TITLE: NORTH PROJECTION SECTIONS | DATE: 3-7-69

REVISIONS
7-16-69
8-8-69

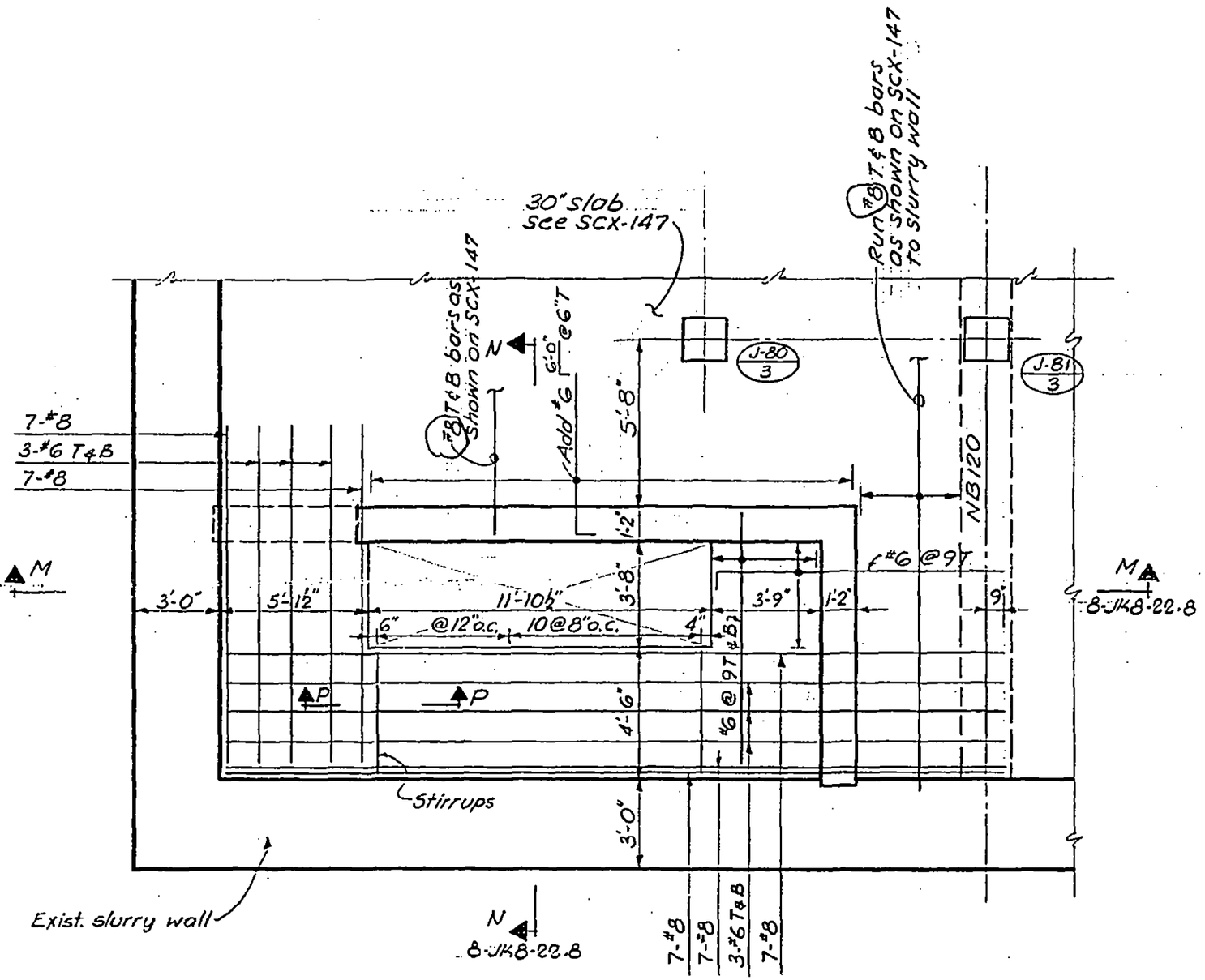

PART PLAN AT EL. 267

¼"=1'-0"

LICENSED PROFESSIONAL ENGINEER — LESLIE E. ROBERTSON — No. 34360 — UNIVERSITY OF THE STATE OF NEW YORK

DESIGNED

DRAWN: J. Gricius

REVIEWED: E.L.

8-JK8-22.7

SKILLING, HELLE, CHRISTIANSEN, ROBERTSON — Structural & Civil Engineers

PROJECT THE WORLD TRADE CENTER | TITLE NORTH PROJECTION SECTIONS | DATE 3-7-69

REVISIONS
7-16-69
8-8-69

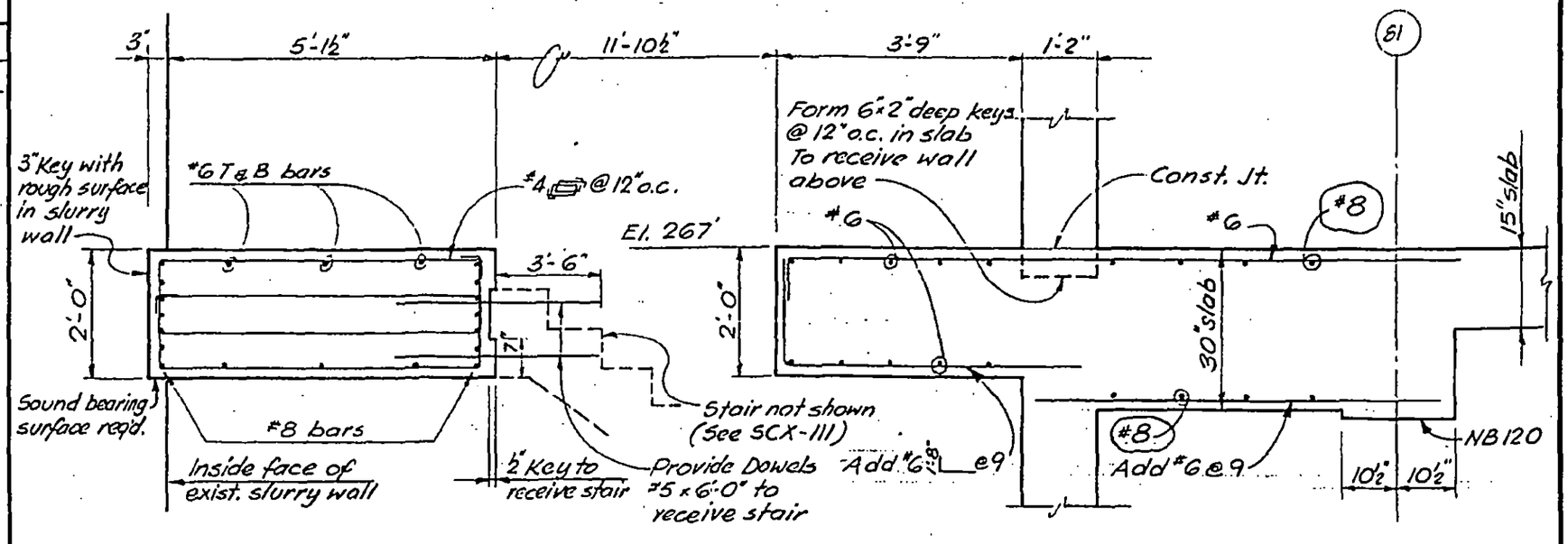

Section M-M
½" = 1'-0"

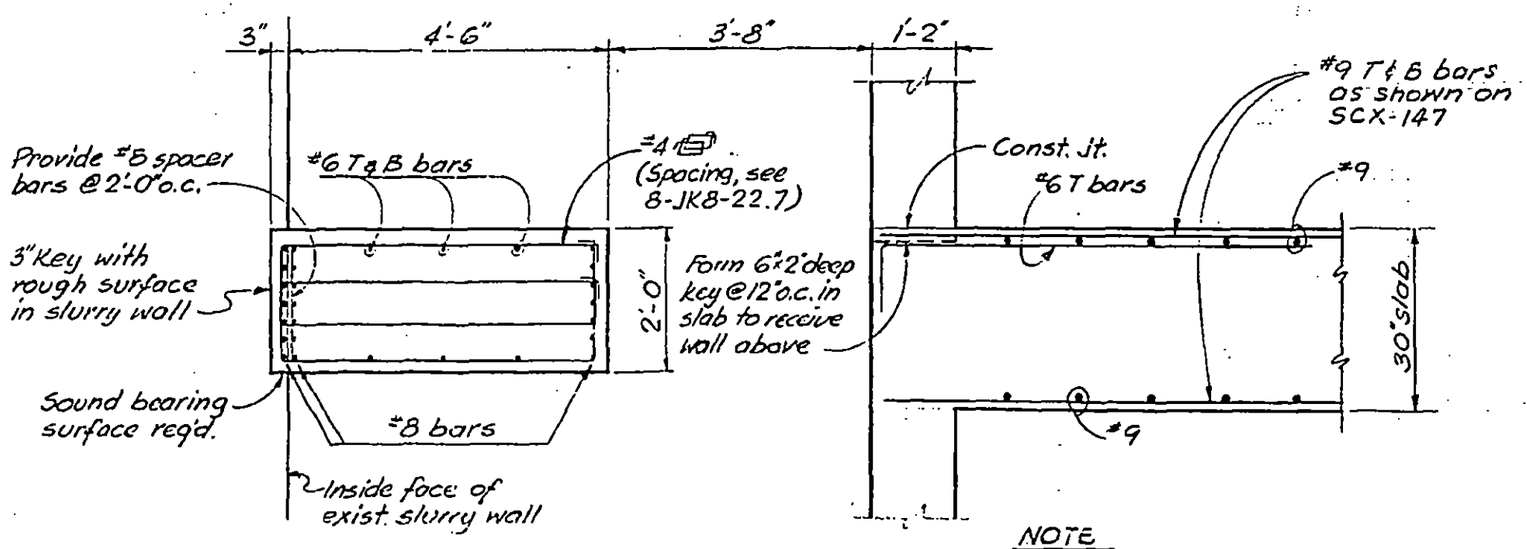

Section N-N
½" = 1'-0"

NOTE
See 8-JK8-22.7 for location of sections.

LICENSED PROFESSIONAL ENGINEER — LESLIE E. ROBERTSON — No. 34360 — UNIVERSITY OF THE STATE OF NEW YORK

DESIGNED
DRAWN J. Gricius
REVIEWED E.L.

8-JK8-22.8

SKILLING, HELLE, CHRISTIANSEN, ROBERTSON — Structural & Civil Engineers

PROJECT THE WORLD TRADE CENTER | TITLE NORTH PROJECTION SECTIONS | DATE 3-7-69

REVISIONS

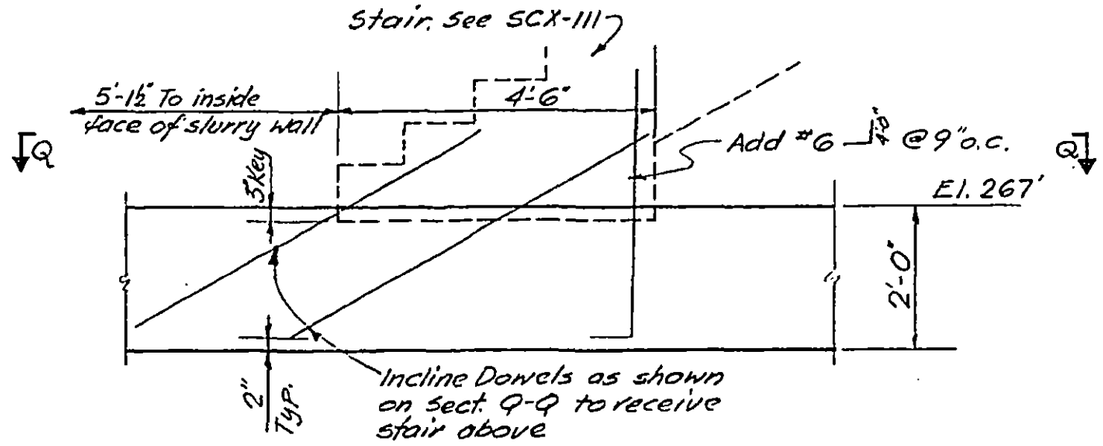

Section P-P

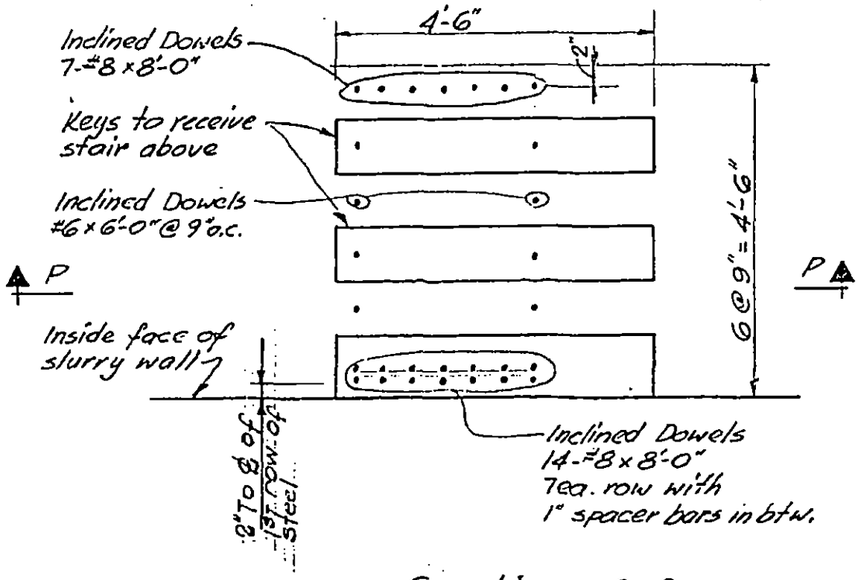

Section Q-Q

½"=1'-0"

LICENSED PROFESSIONAL ENGINEER — LESLIE E. ROBERTSON — No. 34360 — UNIVERSITY OF THE STATE OF NEW YORK

DESIGNED

DRAWN J. Gricius

REVIEWED E.L.

8-JK8-22.9

SKILLING, HELLE, CHRISTIANSEN, ROBERTSON — Structural & Civil Engineers

PROJECT: THE WORLD TRADE CENTER | TITLE: NORTH PROJECTION - SECTIONS | DATE: 4-21-69

REVISIONS

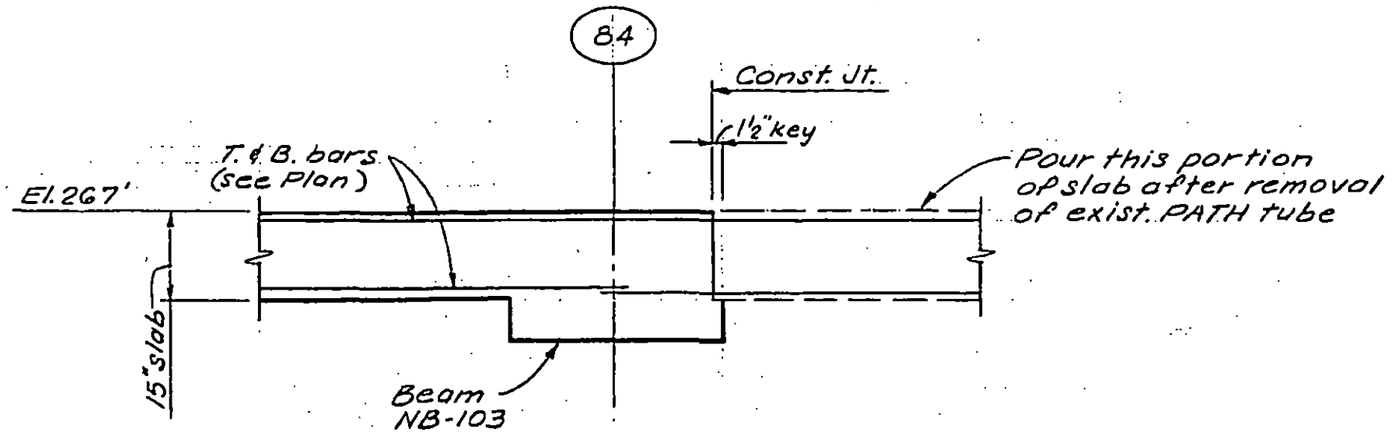

Section R-R
(SCJ-42)

LICENSED PROFESSIONAL ENGINEER
LESLIE E. ROBERTSON
No. 34360
UNIVERSITY OF THE STATE OF NEW YORK

DESIGNED

DRAWN S.C.

REVIEWED E.L.

8-JKB-22.10

SKILLING, HELLE, CHRISTIANSEN, ROBERTSON — Structural & Civil Engineers

PROJECT: THE WORLD TRADE CENTER | TITLE: N. PROJECTION - TEMP. WALL OVER TOP OF SLURRY WALL | DATE: 10-17-69

REVISIONS

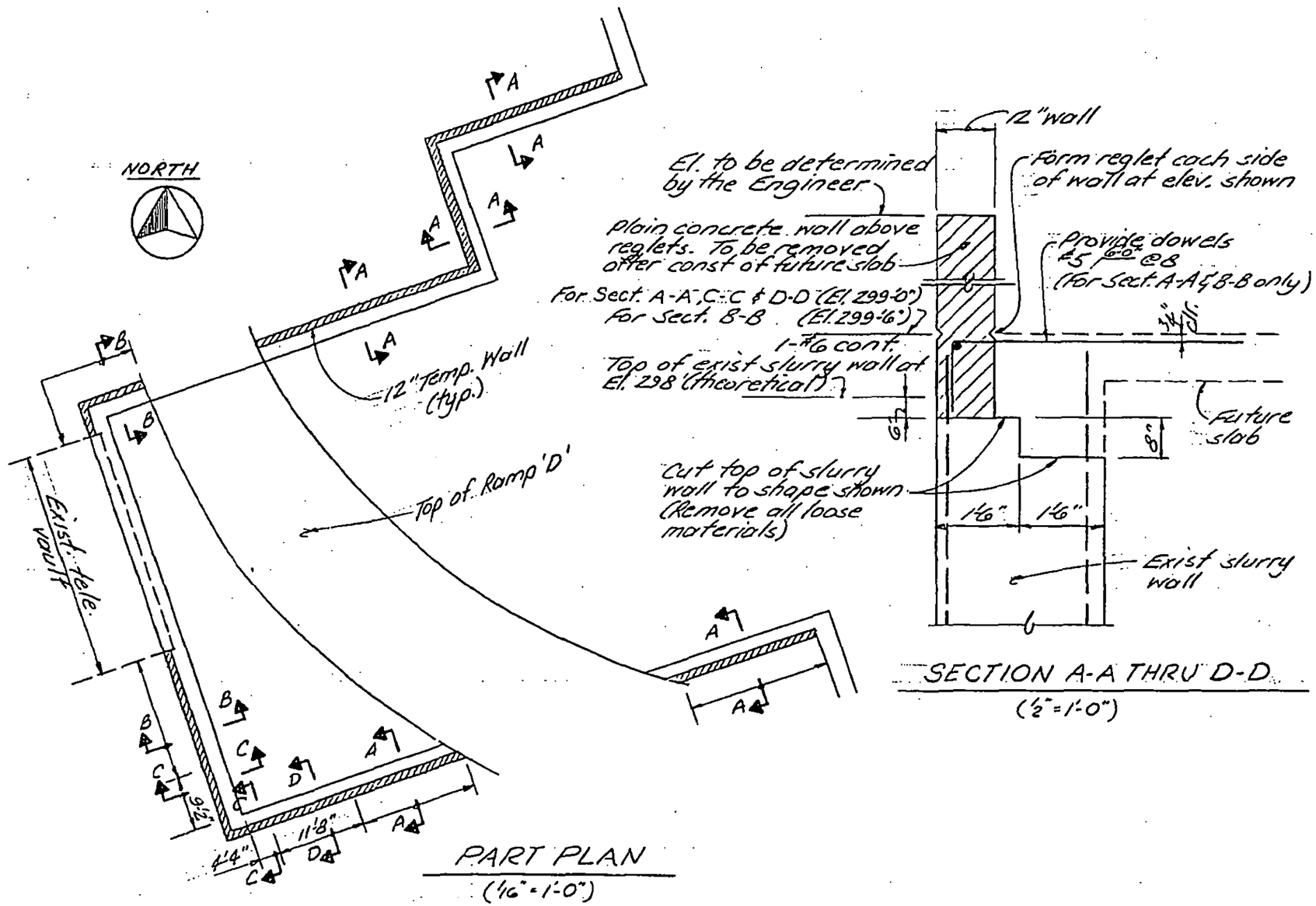

PART PLAN
(1/16" = 1'-0")

SECTION A-A THRU D-D
(1/2" = 1'-0")

LICENSED PROFESSIONAL ENGINEER LESLIE E. ROBERTSON No. 34360 UNIVERSITY OF THE STATE OF NEW YORK

DESIGNED

DRAWN J. Adams

REVIEWED E.L.

8-JK8-22.11

SKILLING, HELLE, CHRISTIANSEN, ROBERTSON — Structural & Civil Engineers

PROJECT THE WORLD TRADE CENTER | TITLE NORTH PROJECTION - SECTIONS | DATE 10-30-69

REVISIONS

4-8-70 GEN. REV.

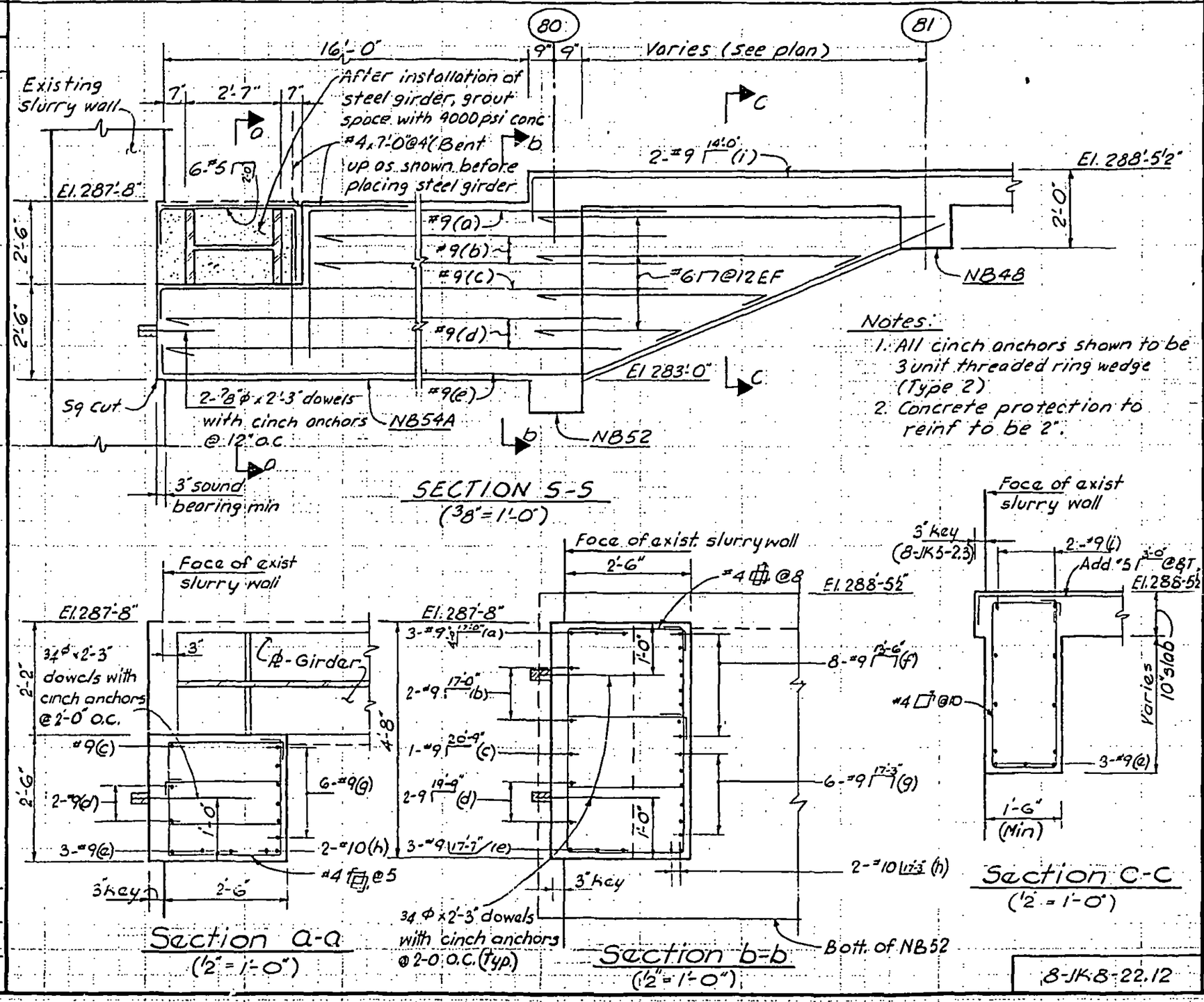

SECTION S-S
(3/8" = 1'-0")

Section a-a
(1/2" = 1'-0")

Section b-b
(1/2" = 1'-0")

Section C-C
(1/2" = 1'-0")

8-JK-8-22.12

LICENSED PROFESSIONAL ENGINEER — LESLIE E. ROBERTSON — No. 34360 — UNIVERSITY OF THE STATE OF NEW YORK

DESIGNED

DRAWN D. Huggins

REVIEWED E.L.

SKILLING, HELLE, CHRISTIANSEN, ROBERTSON — Structural & Civil Engineers

PROJECT THE WORLD TRADE CENTER | TITLE NORTH PROJECTION - SECTIONS | DATE 10-30-69

REVISIONS
4-8-70
6-25-70

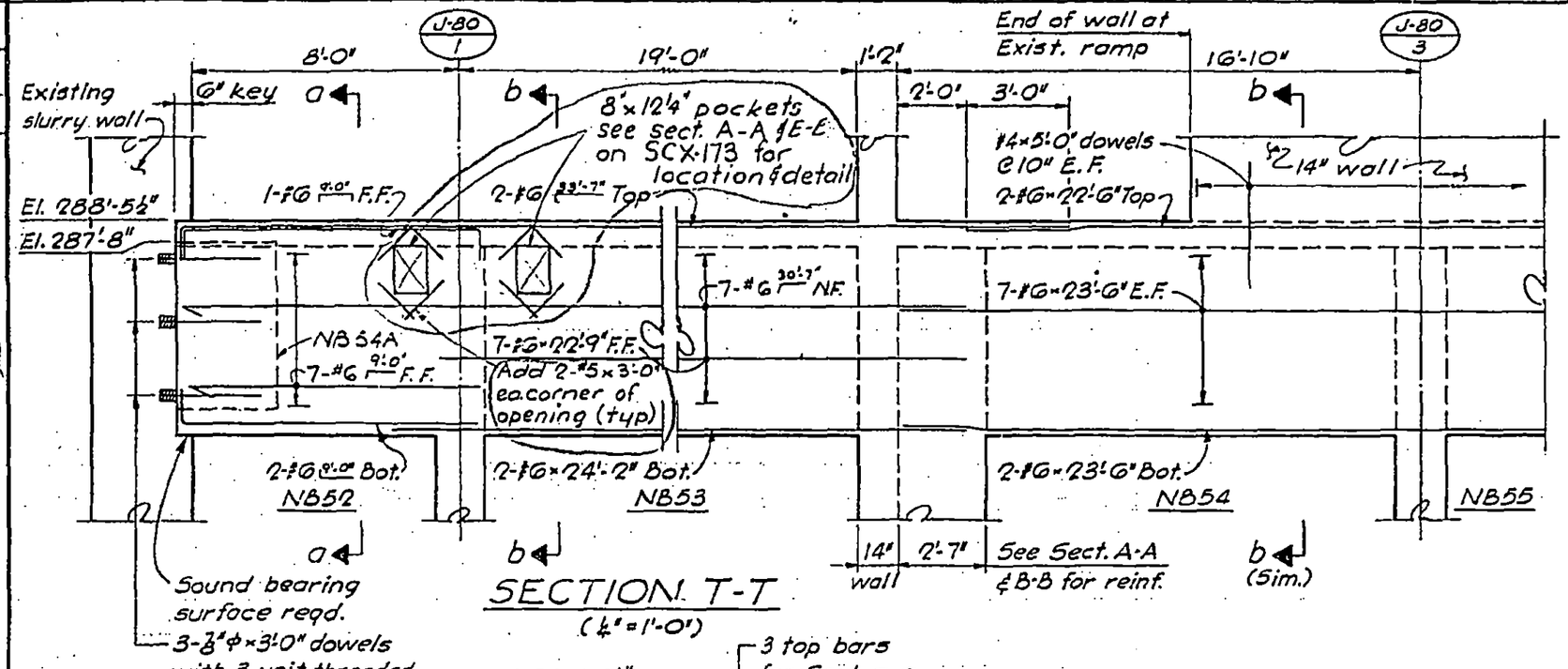

SECTION T-T
(¼" = 1'-0")

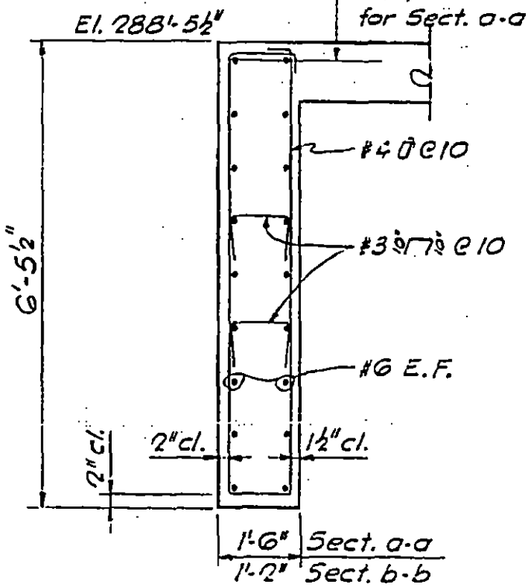

SECTION a-a
SECTION b-b
(½" = 1'-0")

LICENSED PROFESSIONAL ENGINEER — LESLIE E. ROBERTSON — No. 34360 — UNIVERSITY OF THE STATE OF NEW YORK

DESIGNED E. L.
DRAWN G. K.
REVIEWED

8-JK8-22.13

SKILLING, HELLE, CHRISTIANSEN, ROBERTSON — Structural & Civil Engineers

PROJECT THE WORLD TRADE CENTER | TITLE NORTH PROJECTION - SECTIONS | DATE 10-31-69

REVISIONS

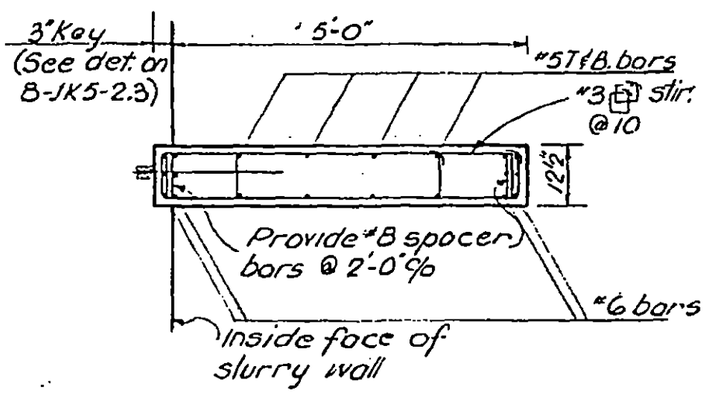

SECTION U-U
(12" = 1'-0")

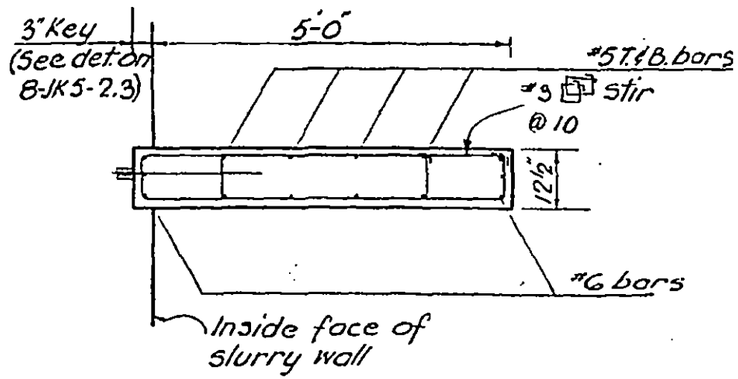

SECTION V-V
(12" = 1'-0")

LICENSED PROFESSIONAL ENGINEER
LESLIE E. ROBERTSON
No. 34360
UNIVERSITY OF THE STATE OF NEW YORK

DESIGNED

DRAWN
D. Huggins

REVIEWED
E.L.

8-JK 8-22.14

SKILLING, HELLE, CHRISTIANSEN, ROBERTSON — Structural & Civil Engineers

PROJECT: THE WORLD TRADE CENTER | TITLE: NORTH PROJECTION - SECTIONS. | DATE: 3-16-70

REVISIONS

6-25-70 GEN. REV.

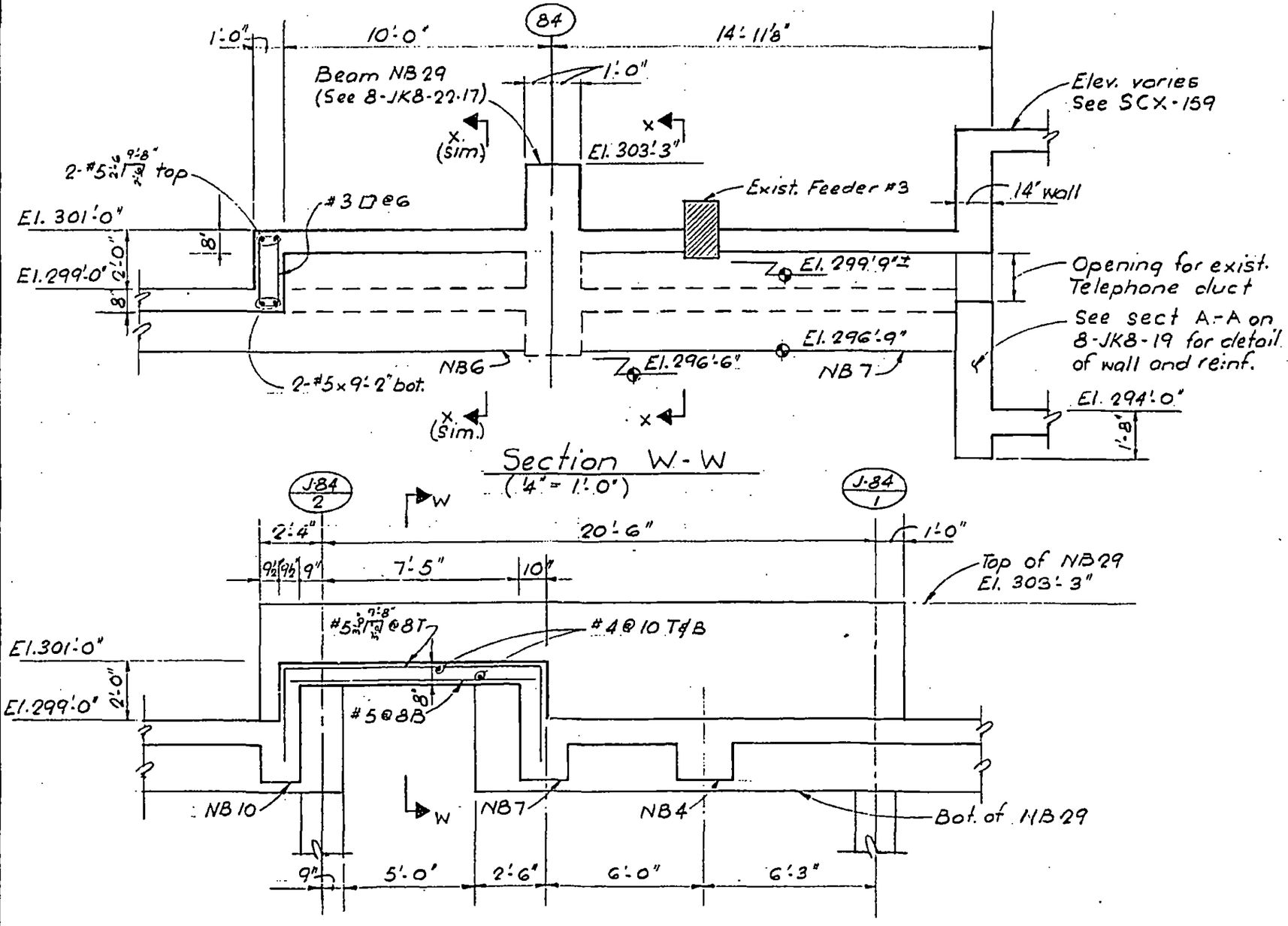

Section W-W
(¼" = 1'-0")

Section X-X
(¼" = 1'-0")

LICENSED PROFESSIONAL ENGINEER
LESLIE E. ROBERTSON
No. 34360
UNIVERSITY OF THE STATE OF NEW YORK

DESIGNED

DRAWN: T. Terrelonge

REVIEWED: E. Liu

8-JK8-22.15

SKILLING, HELLE, CHRISTIANSEN, ROBERTSON — Structural & Civil Engineers

PROJECT THE WORLD TRADE CENTER | TITLE NORTH PROJECTION - SECTIONS | DATE 3-16-70

REVISIONS

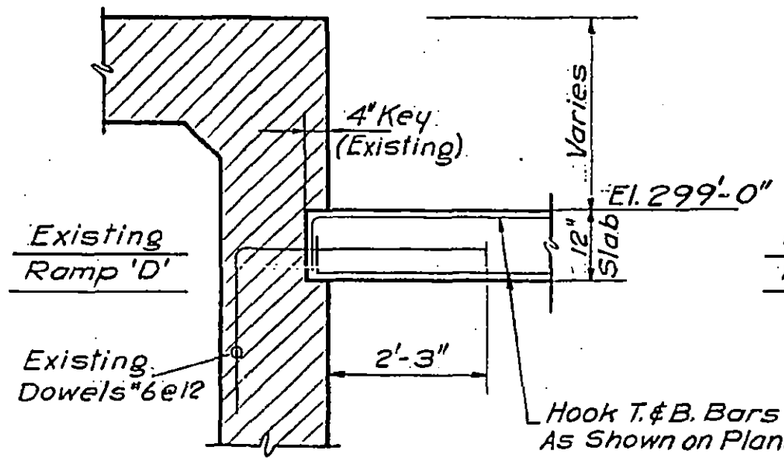

Section Y-Y
(1/2" = 1'-0")

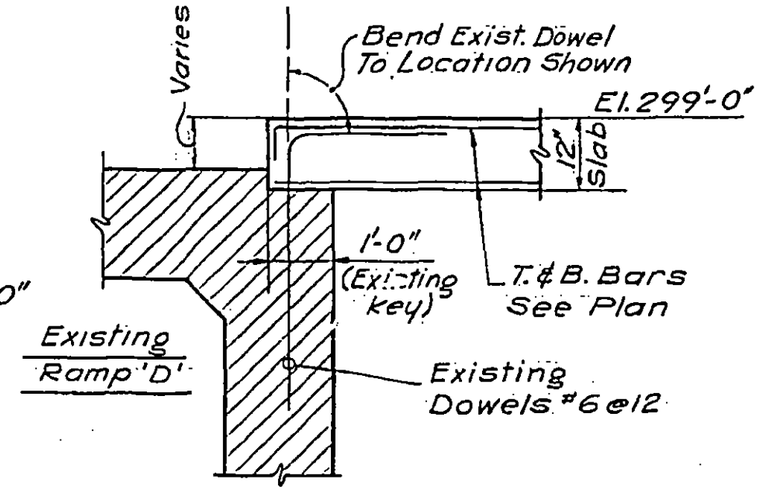

Section Y'-Y'
(1/2" = 1'-0")

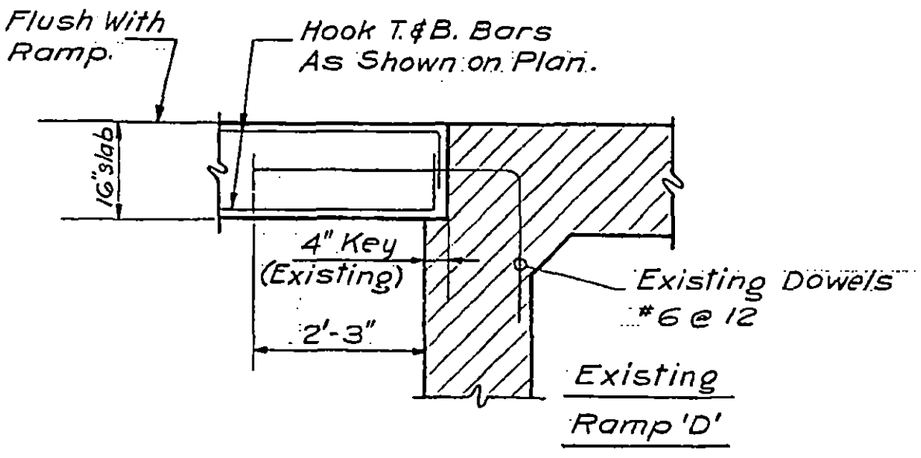

Section Z-Z
(1/2" = 1'-0")

LICENSED PROFESSIONAL ENGINEER
LESLIE E. ROBERTSON
No. 34360
UNIVERSITY OF THE STATE OF NEW YORK

DESIGNED

DRAWN
V. H. A

REVIEWED
E.L.

8-JK8-22.16

SKILLING, HELLE, CHRISTIANSEN, ROBERTSON — Structural & Civil Engineers

PROJECT THE WORLD TRADE CENTER | TITLE NORTH PROJECTION - SECTIONS | DATE 3-16-70

REVISIONS

G-25-70 GEN. REV.

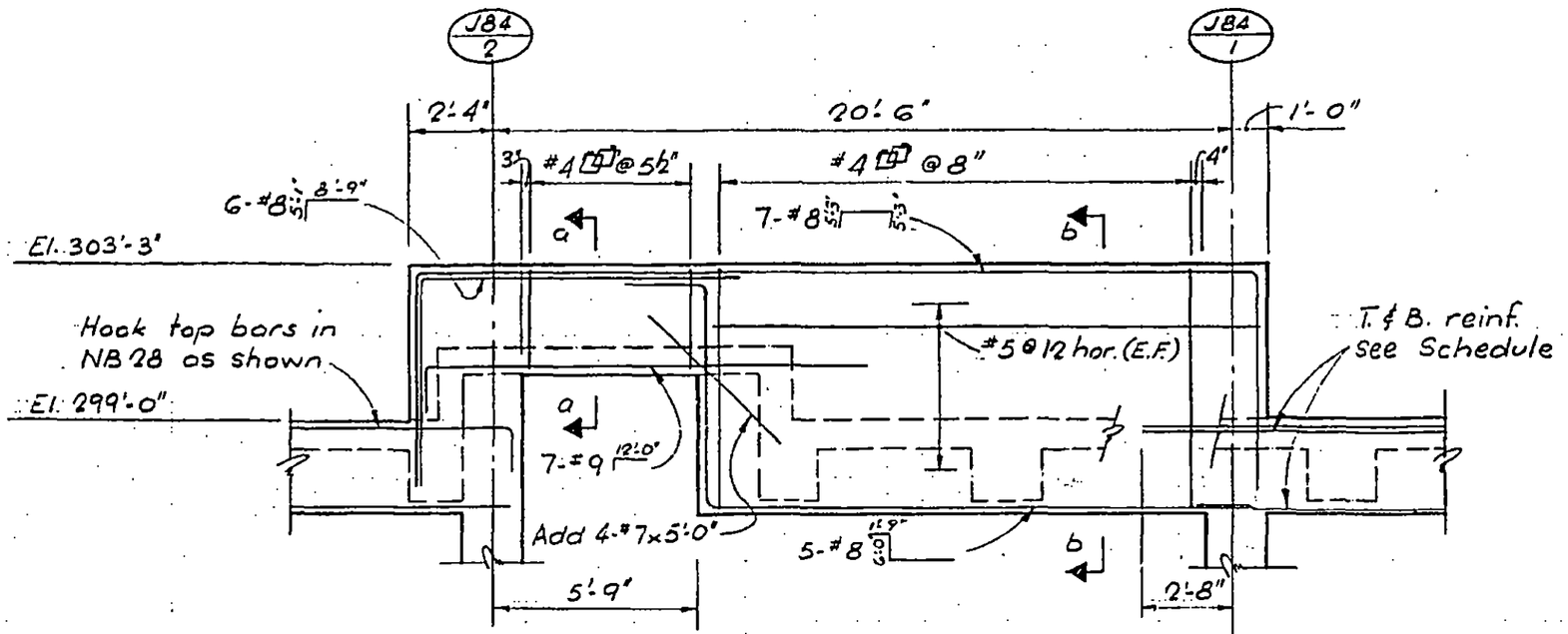

NB 28 (24"x30") | NB 29 (24"x32"~81") | NB 30 (24"x30")

(1/4" = 1'-0)

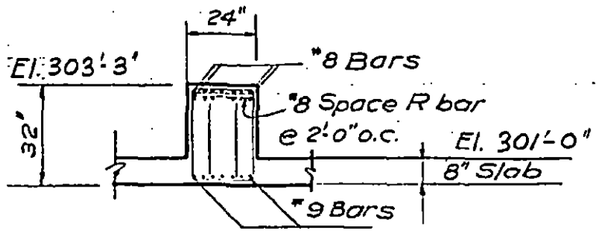

Section a-a

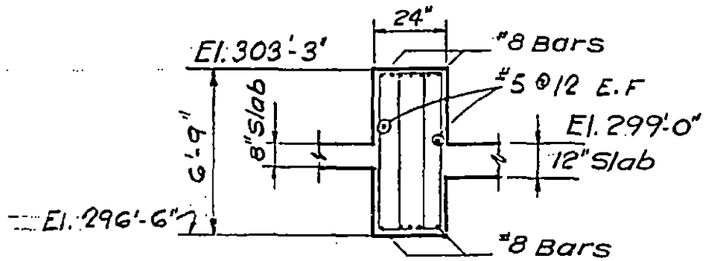

Section b-b

LICENSED PROFESSIONAL ENGINEER LESLIE E. ROBERTSON No. 34360 UNIVERSITY OF THE STATE OF NEW YORK

DESIGNED

DRAWN V.H.A.

REVIEWED E.L.

8-JK8-22.17

SKILLING, HELLE, CHRISTIANSEN, ROBERTSON — Structural & Civil Engineers

PROJECT THE WORLD TRADE CENTER | TITLE NORTH PROJECTION - SECTIONS | DATE 3-16-70

REVISIONS

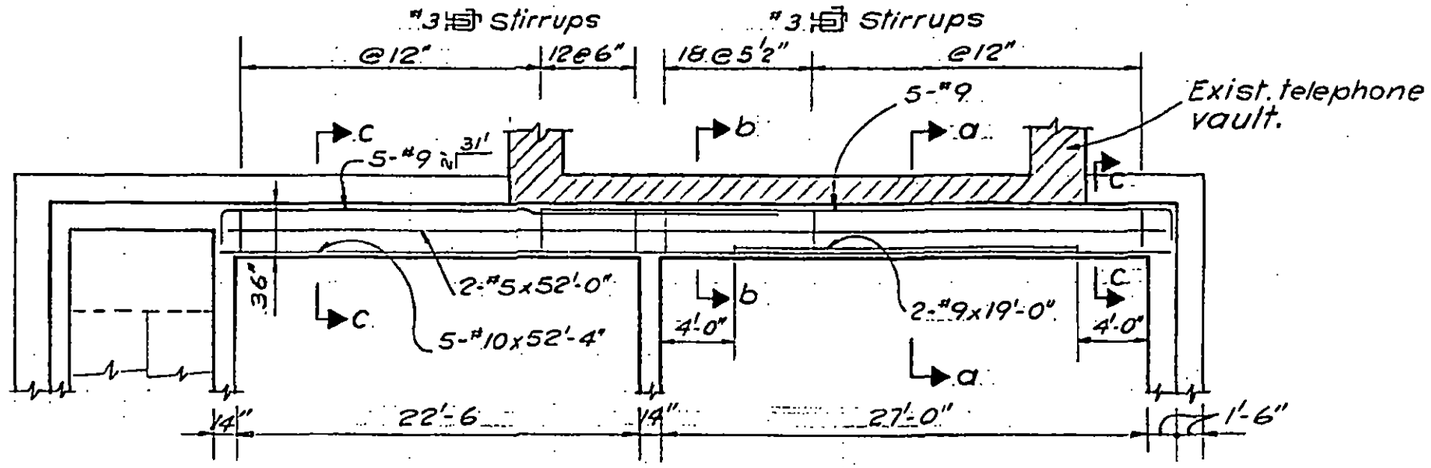

PLAN
(1/8 = 1'-0")

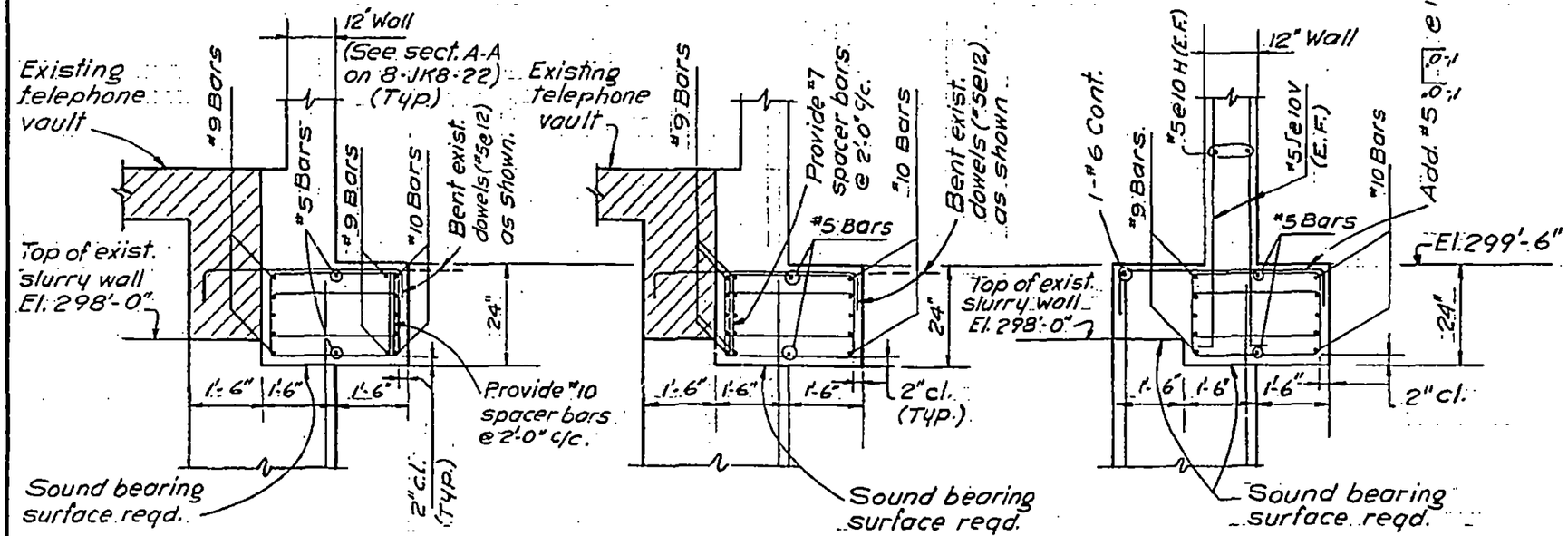

Section a-a
(3/8" = 1'-0")

Section b-b
(3/8" = 1'-0")

Section c-c
(3/8" = 1'-0")

LICENSED PROFESSIONAL ENGINEER — LESLIE E. ROBERTSON — No. 34360 — UNIVERSITY OF THE STATE OF NEW YORK

DESIGNED

DRAWN V. H. A

REVIEWED E.L.

8-JK8-22.18

SKILLING, HELLE, CHRISTIANSEN, ROBERTSON — Structural & Civil Engineers

PROJECT THE WORLD TRADE CENTER | TITLE NORTH PROJECTION - SECTIONS | DATE 3-16-70

REVISIONS

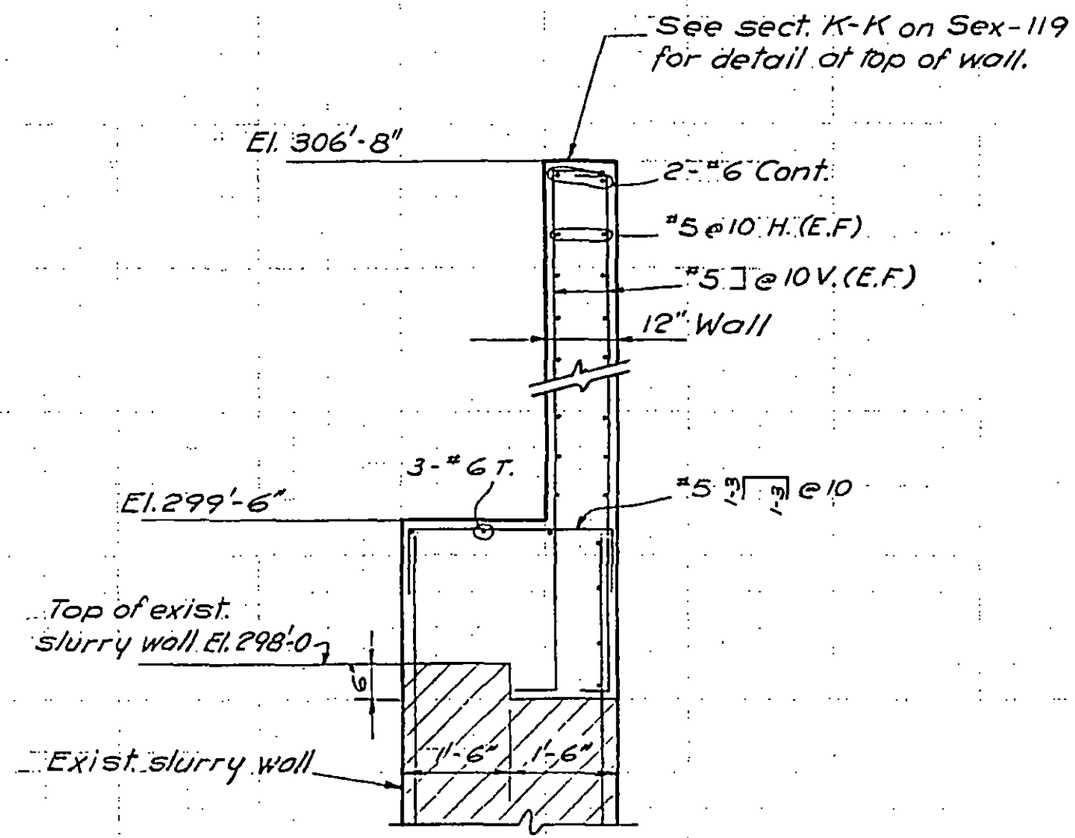

LICENSED PROFESSIONAL ENGINEER
LESLIE E. ROBERTSON
NO. 34360
UNIVERSITY OF THE STATE OF NEW YORK

DESIGNED

DRAWN V.H.A

REVIEWED E.L.

8-JK8-22.19

WTCI-1068-LERA,1

SKILLING, HELLE, CHRISTIANSEN, ROBERTSON — Structural & Civil Engineers

PROJECT THE WORLD TRADE CENTER | TITLE SECTIONS | DATE 1-17-69

REVISIONS

3-11-69

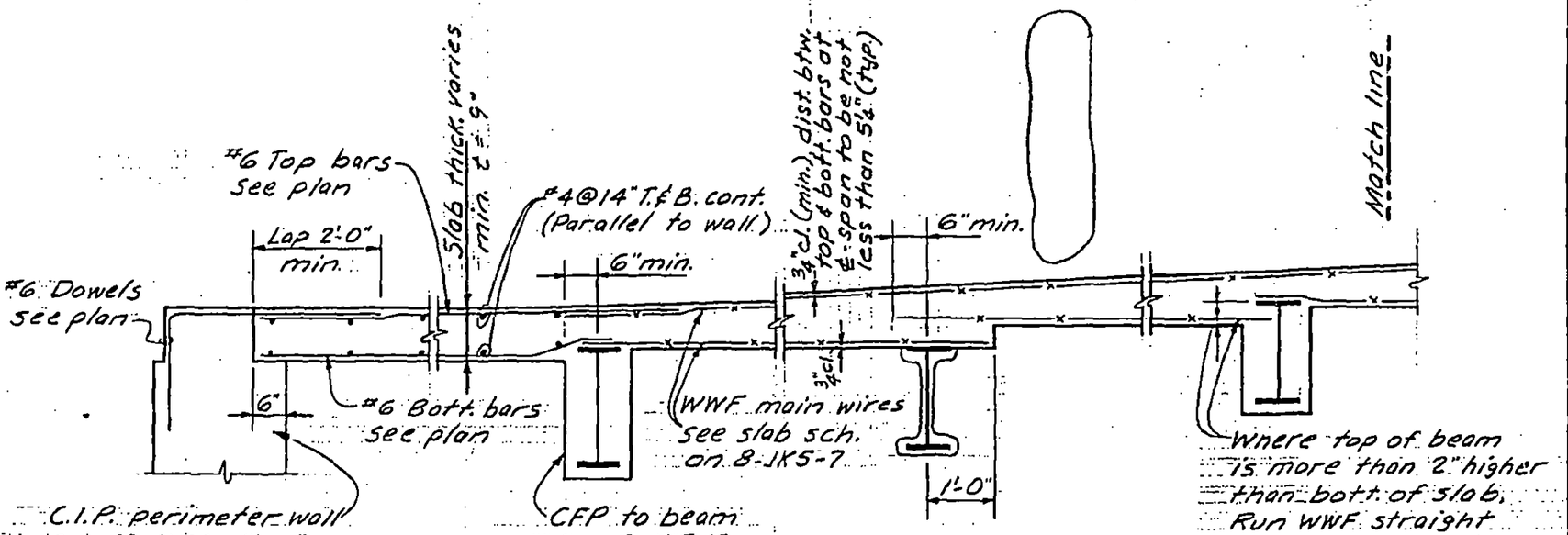

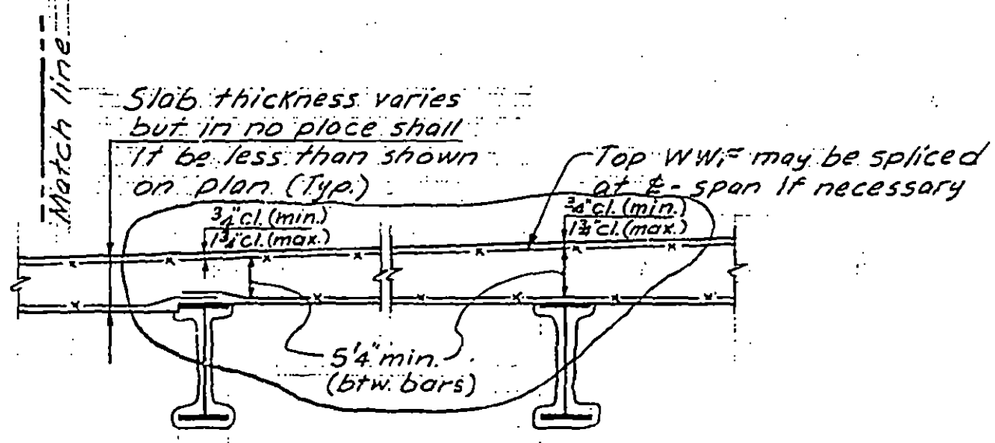

Section D-D

(This Section also serves as typical detail for areas having similar conditions)

LICENSED PROFESSIONAL ENGINEER — LESLIE E. ROBERTSON — No. 34360 — UNIVERSITY OF THE STATE OF NEW YORK

DESIGNED

DRAWN S.C.

REVIEWED

8-JK8-24.1

1060-L,2

SKILLING, HELLE, CHRISTIANSEN, ROBERTSON — Structural & Civil Engineers

PROJECT: THE WORLDTRADE CENTER | TITLE: SECTION AT BEAM REQUIRING LATERAL SUPPORT | DATE: 8-23-68

REVISIONS

5-5-69

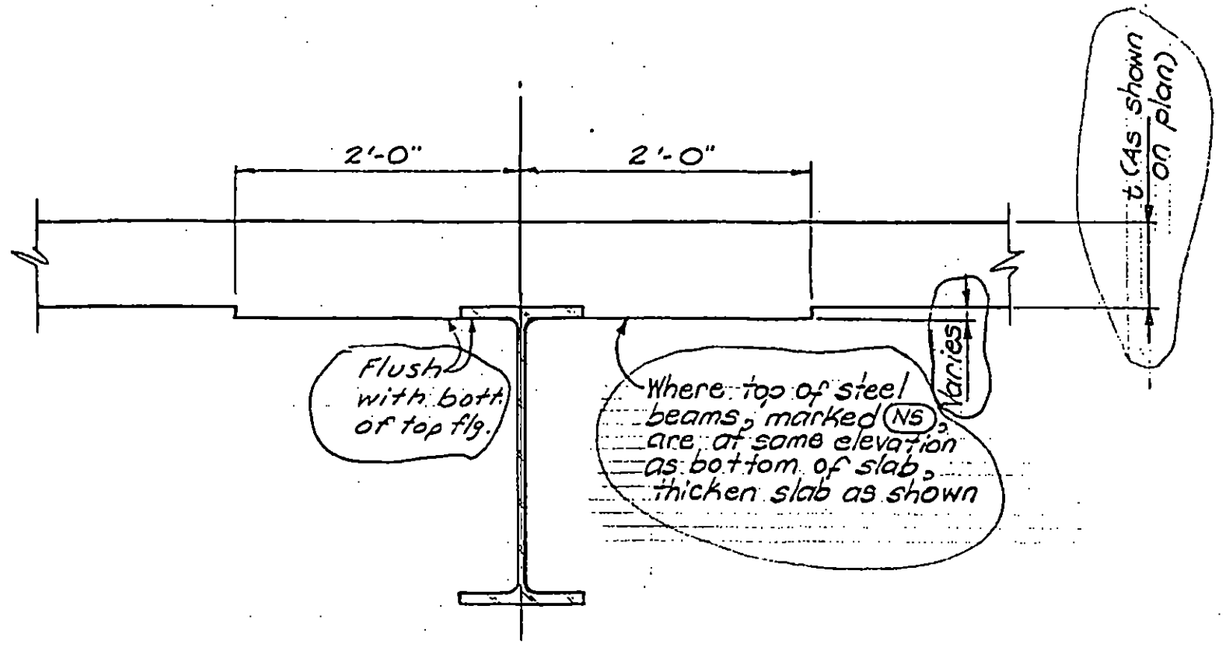

LICENSED PROFESSIONAL ENGINEER
LESLIE E. ROBERTSON
No. 34360
UNIVERSITY OF THE STATE OF NEW YORK

DESIGNED

DRAWN
S.C.

REVIEWED
E.L.

8-JKB-25

SKILLING, HELLE, CHRISTIANSEN, ROBERTSON — Structural & Civil Engineers

PROJECT THE WORLD TRADE CENTER | TITLE SECTION | DATE 10-21-68

REVISIONS

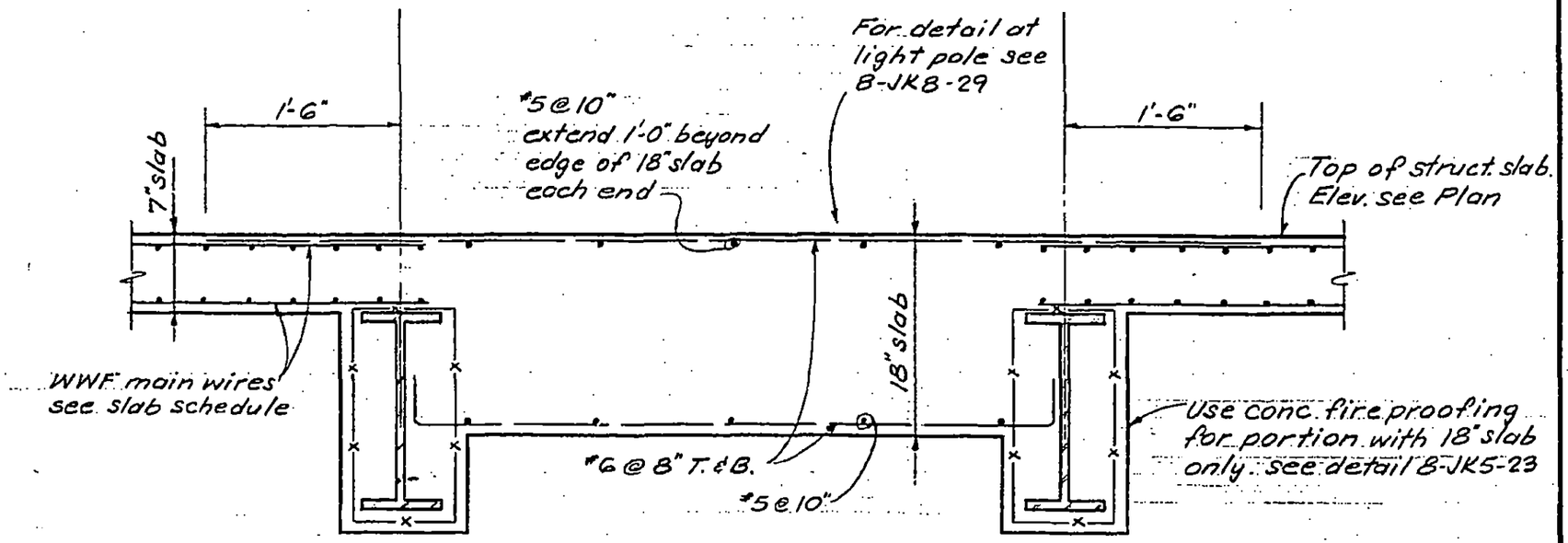

Section C-C

Scale: 1"=1'-0"

LICENSED PROFESSIONAL ENGINEER — LESLIE E. ROBERTSON — No. 34360 — UNIVERSITY OF THE STATE OF NEW YORK

DESIGNED

DRAWN

REVIEWED

8-JK8-28

SKILLING, HELLE, CHRISTIANSEN, ROBERTSON — Structural & Civil Engineers

PROJECT THE WORLD TRADE CENTER | TITLE DETAIL AT LIGHT POLE | DATE 10-21-68

REVISIONS

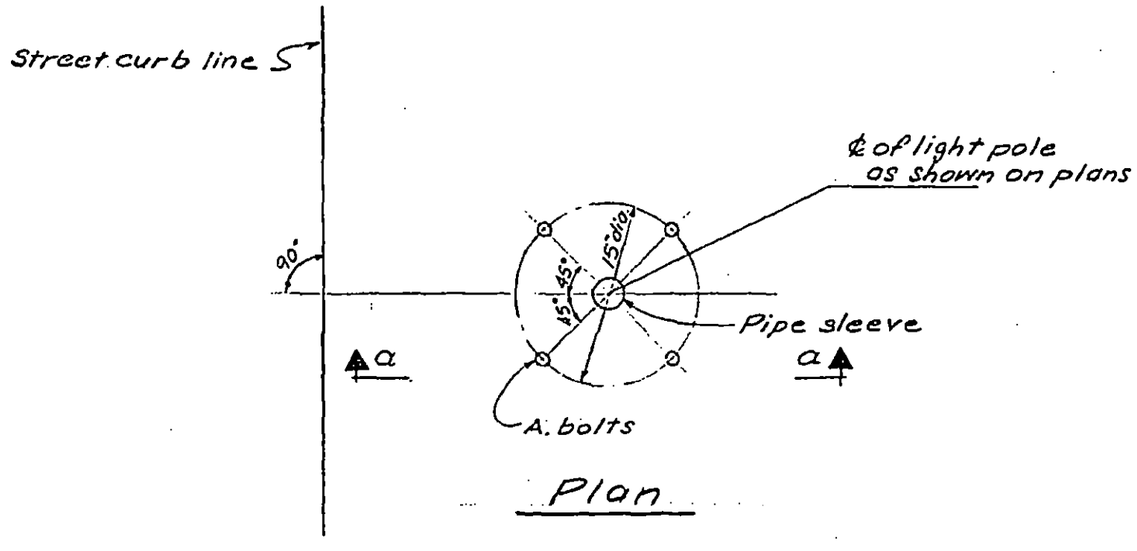

Plan

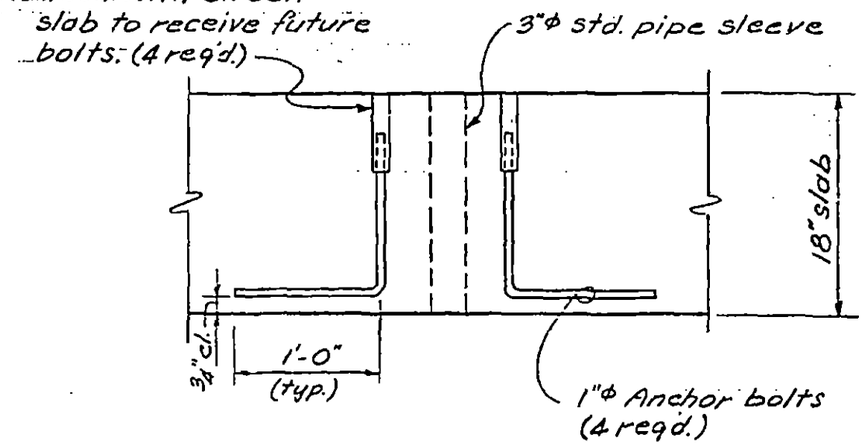

Section a-a

LICENSED PROFESSIONAL ENGINEER LESLIE E. ROBERTSON No. 34360 STATE OF NEW YORK

DESIGNED

DRAWN

REVIEWED

8-JKB-29

SKILLING, HELLE, CHRISTIANSEN, ROBERTSON — Structural & Civil Engineers

PROJECT: THE WORLD TRADE CENTER | TITLE: SECTIONS | DATE: 10-21-68

REVISIONS
12-9-68
4-28-70

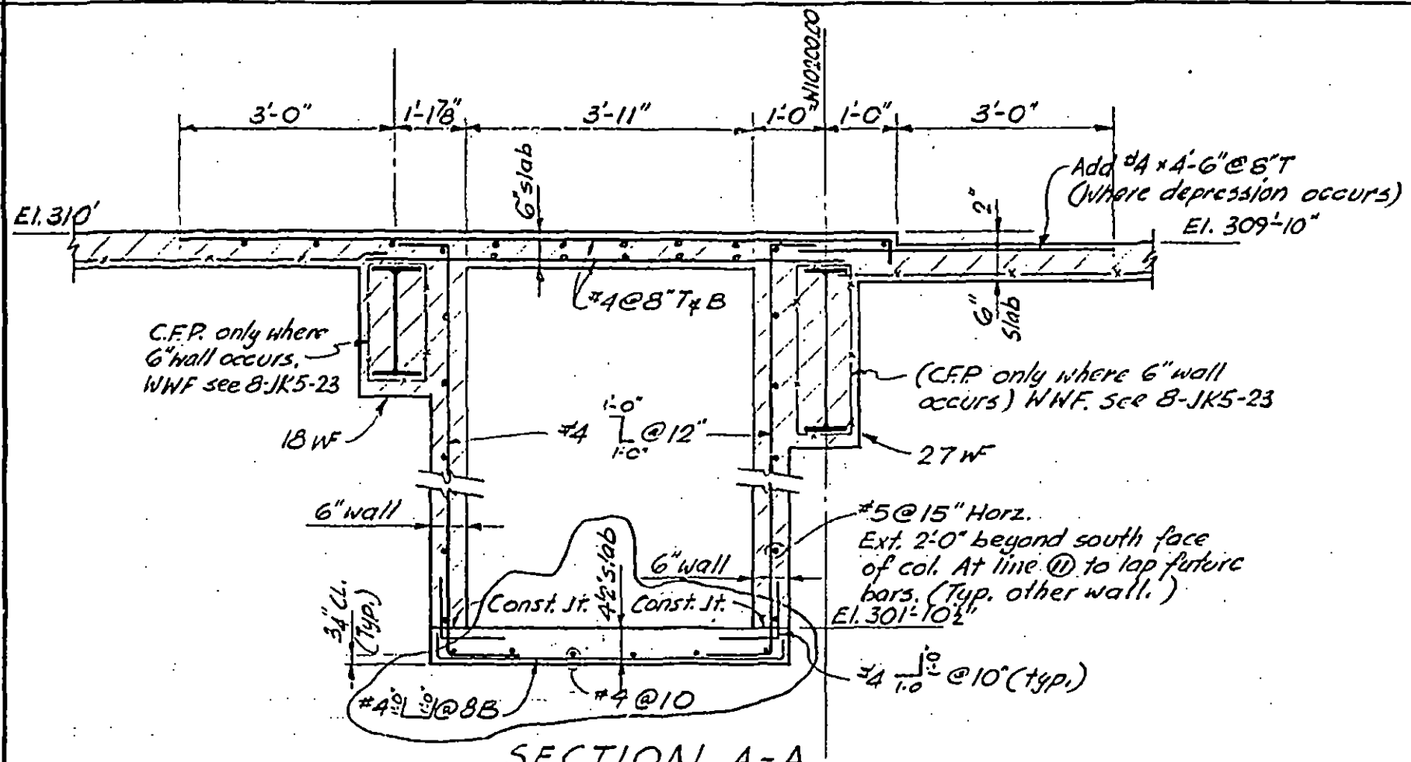

SECTION A-A
(½"=1'-0")

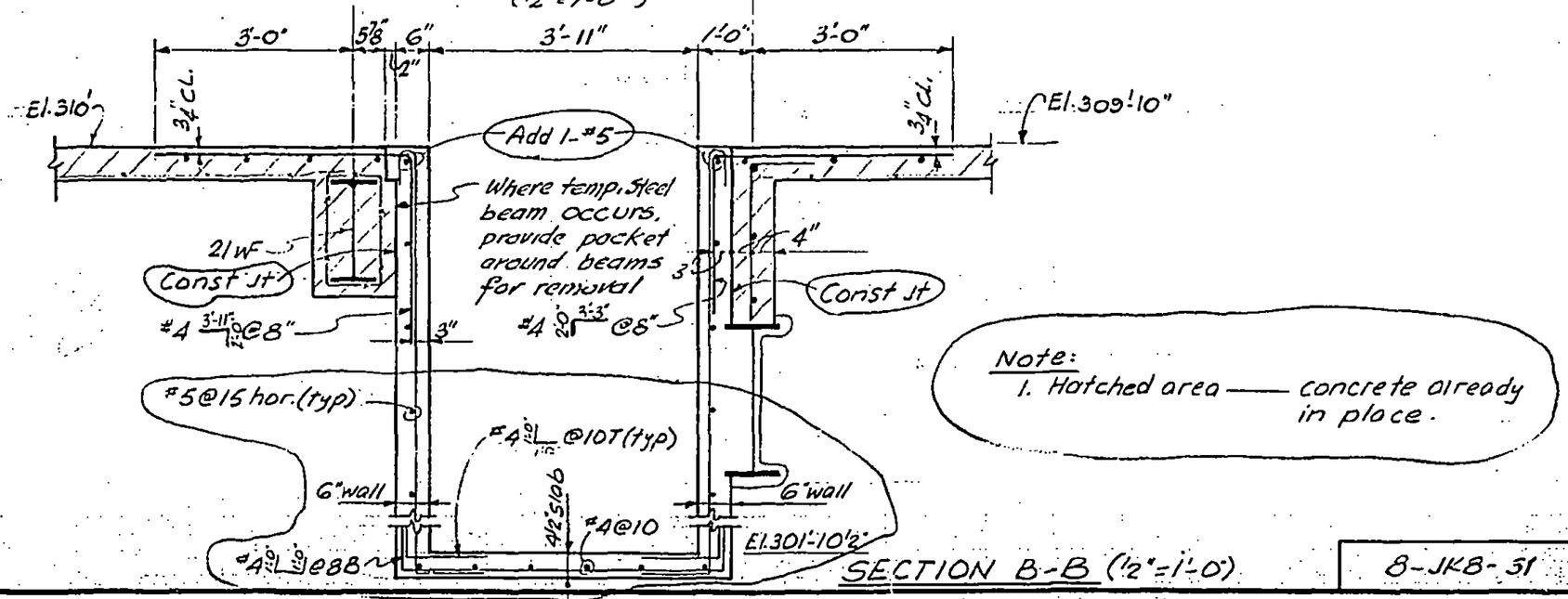

SECTION B-B (½"=1'-0")

Note:
1. Hatched area —— concrete already in place.

DESIGNED
DRAWN S.C.
REVIEWED E.L.

8-JK8-51

SKILLING, HELLE, CHRISTIANSEN, ROBERTSON — Structural & Civil Engineers

PROJECT: THE WORLD TRADE CENTER | TITLE: SECTIONS | DATE: 10-21-68

REVISIONS
12-9-68
2-27-69
4-28-70

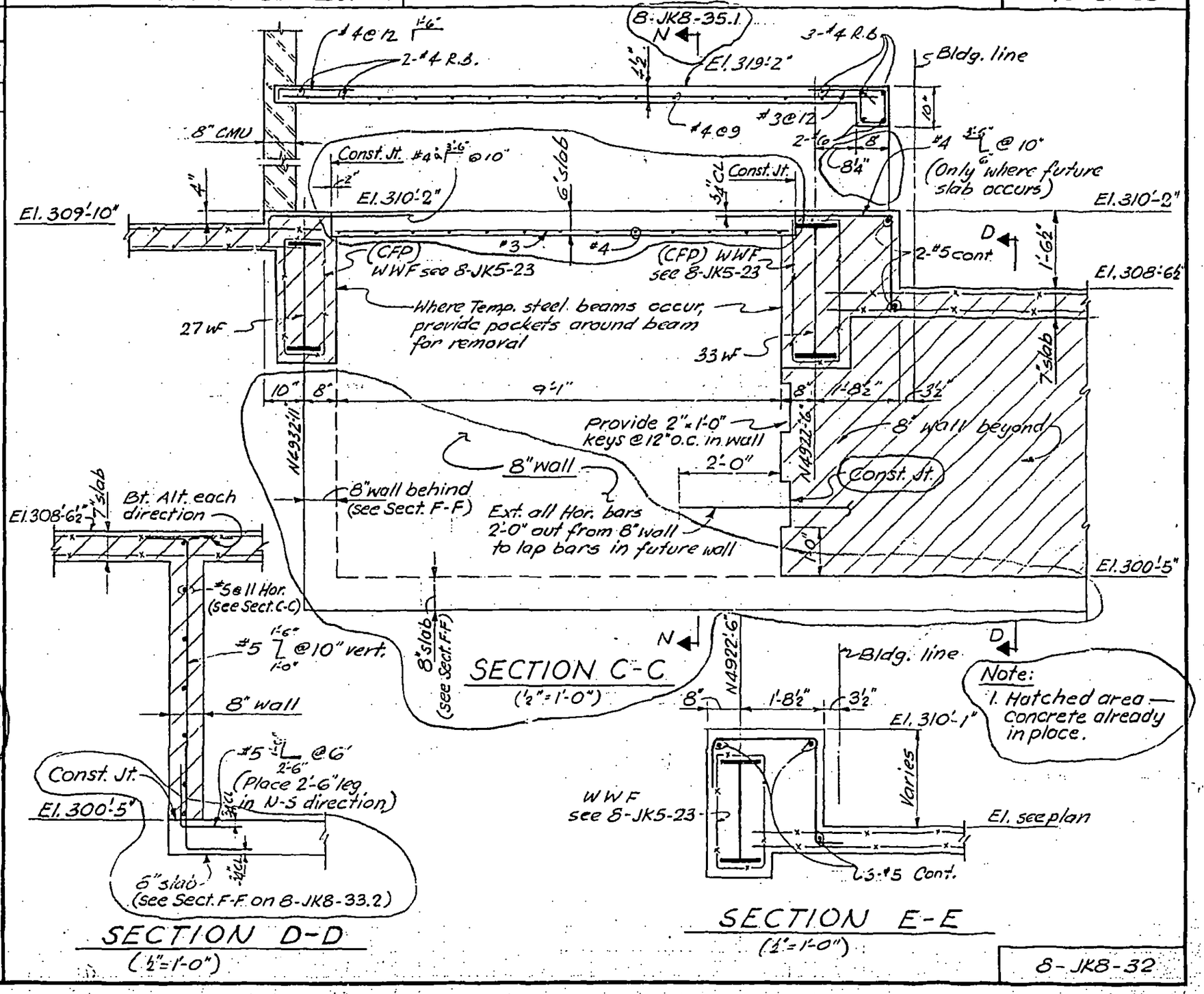

LICENSED PROFESSIONAL ENGINEER — LESLIE E. ROBERTSON — No. 34360 — CERTIFICATE OF THE STATE OF NEW YORK

DESIGNED
DRAWN: S.C.
REVIEWED: E.L.

8-JK8-32

SKILLING, HELLE, CHRISTIANSEN, ROBERTSON — Structural & Civil Engineers

PROJECT: THE WORLD TRADE CENTER | TITLE: SECTIONS | DATE: 10-21-68

REVISIONS
12-9-68
12-18-68
2-14-69
4-28-70

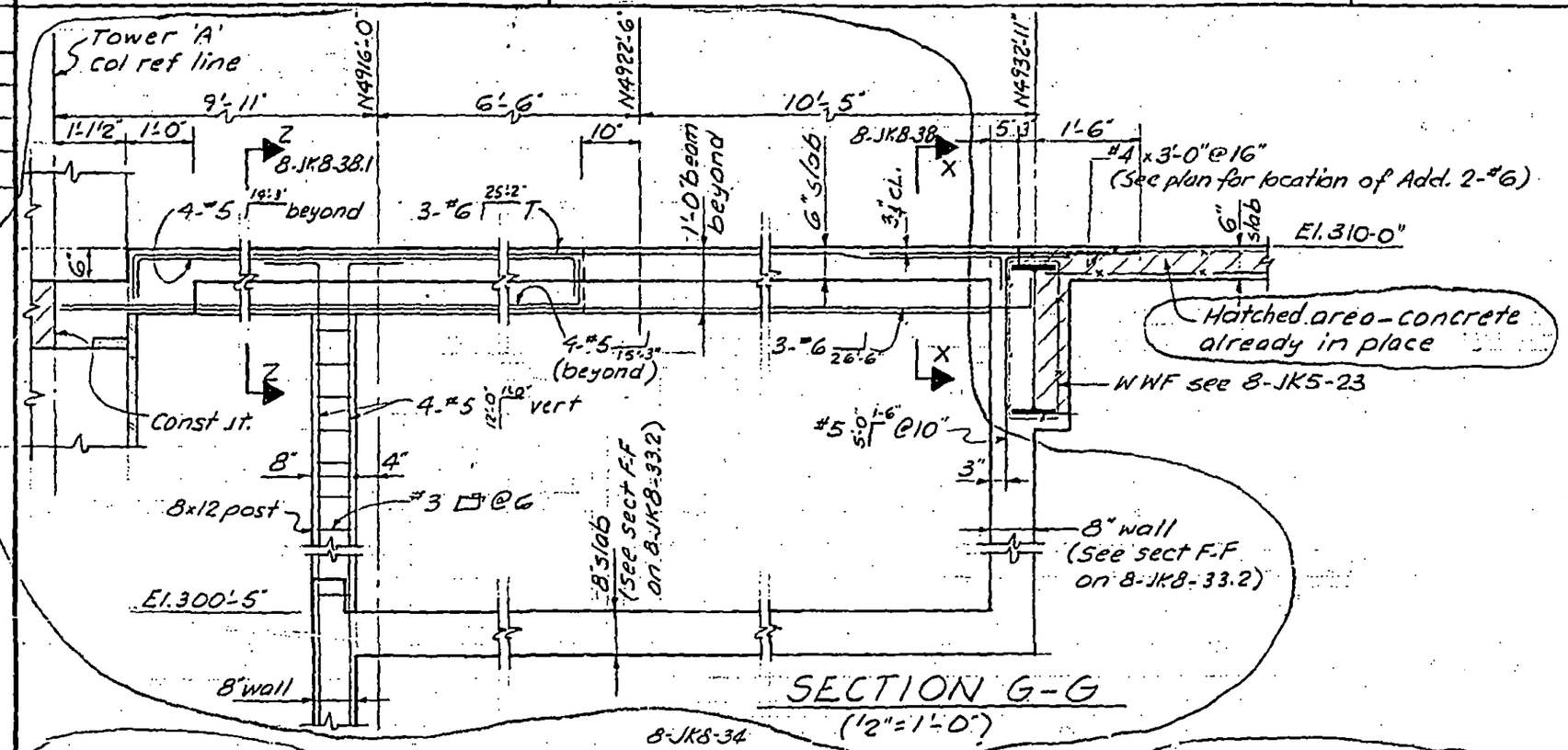

DESIGNED

DRAWN SC.

REVIEWED

8-JK8-33.1

SKILLING, HELLE, CHRISTIANSEN, ROBERTSON — Structural & Civil Engineers

PROJECT: THE WORLD TRADE CENTER | TITLE: SECTIONS | DATE: 12-18-68

REVISIONS

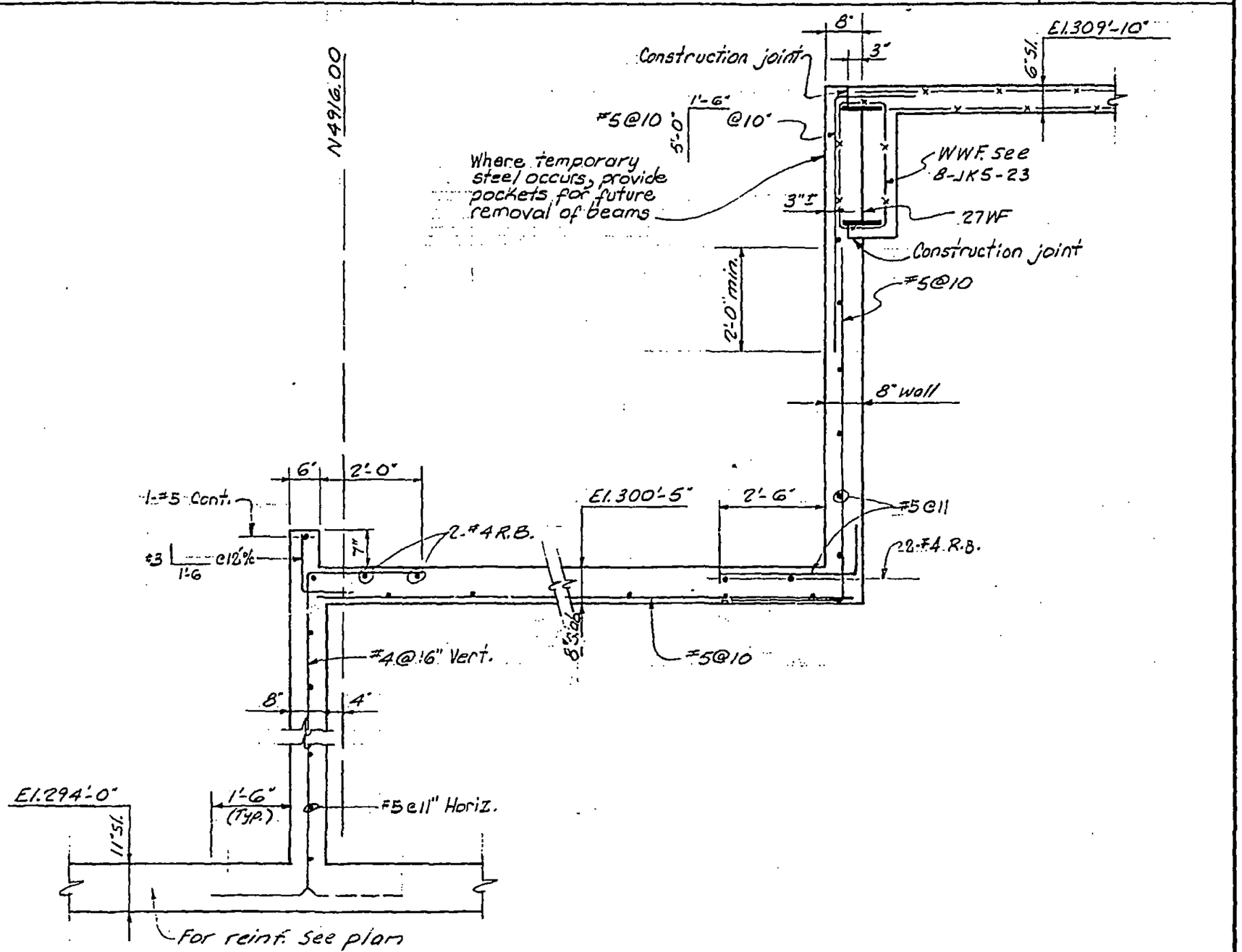

Section F-F

LICENSED PROFESSIONAL ENGINEER — LESLIE E. ROBERTSON — No. 34360 — UNIVERSITY OF THE STATE OF NEW YORK

DESIGNED

DRAWN: S.C.

REVIEWED

8-JK8-33.2

SKILLING, HELLE, CHRISTIANSEN, ROBERTSON — Structural & Civil Engineers

PROJECT THE WORLD TRADE CENTER | TITLE SECTIONS | DATE 10-21-68

REVISIONS
12-9-68
2-14-69

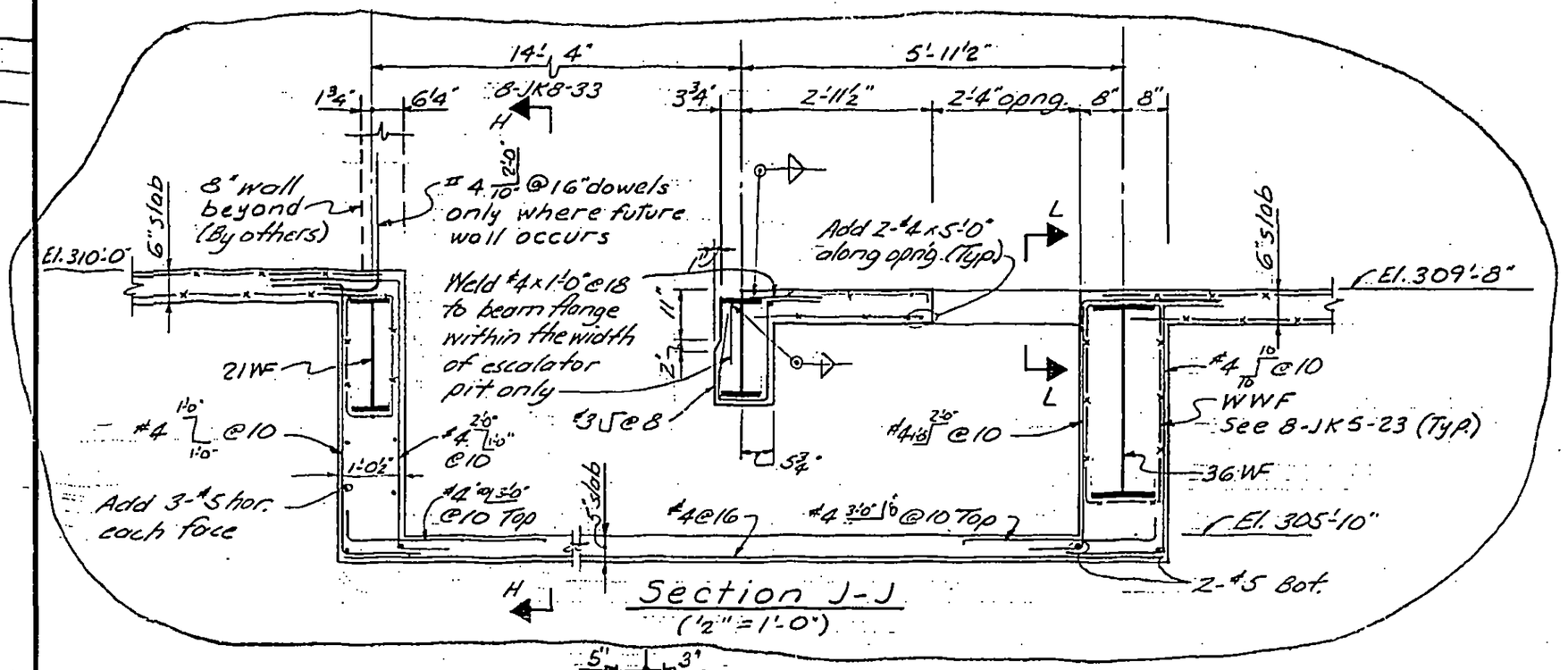

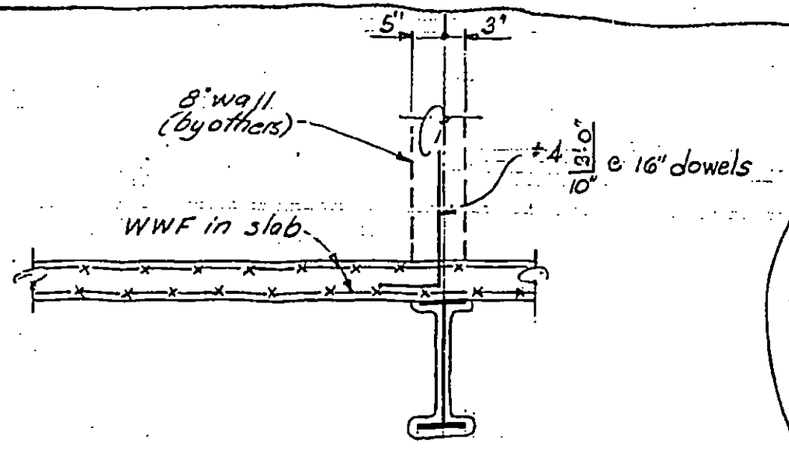

Section K-K
(½" = 1'-0")

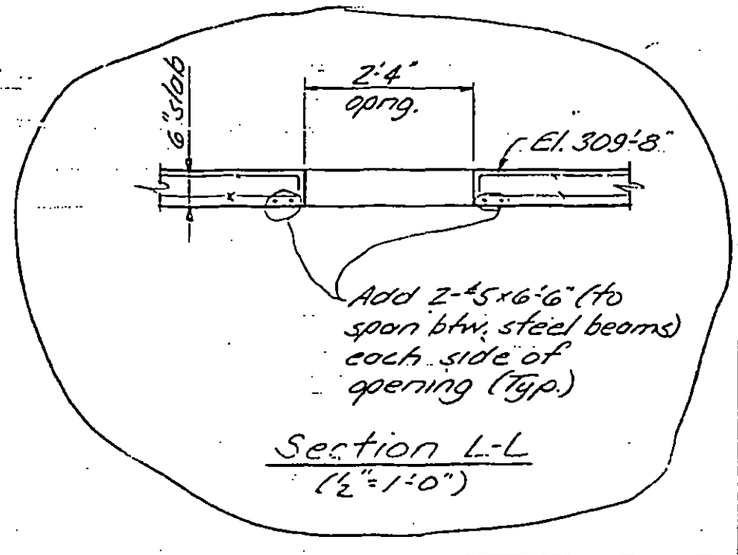

Section L-L
(½" = 1'-0")

LICENSED PROFESSIONAL ENGINEER
LESLIE E. ROBERTSON
No. 34360
STATE OF NEW YORK

DESIGNED
DRAWN S.C.
REVIEWED J.M. & E.L.

8-JK8-34

SKILLING, HELLE, CHRISTIANSEN, ROBERTSON — Structural & Civil Engineers

PROJECT THE WORLD TRADE CENTER | TITLE SECTIONS | DATE 10-21-68

REVISIONS

4-28-70

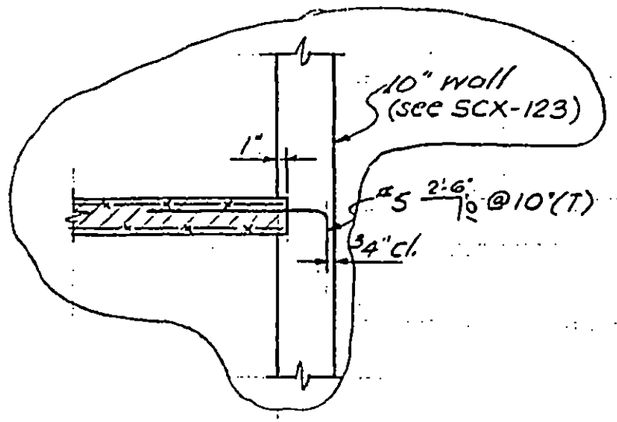

Section M-M
(1/2" = 1'-0")

Note:
1. Hatched area — concrete already in place

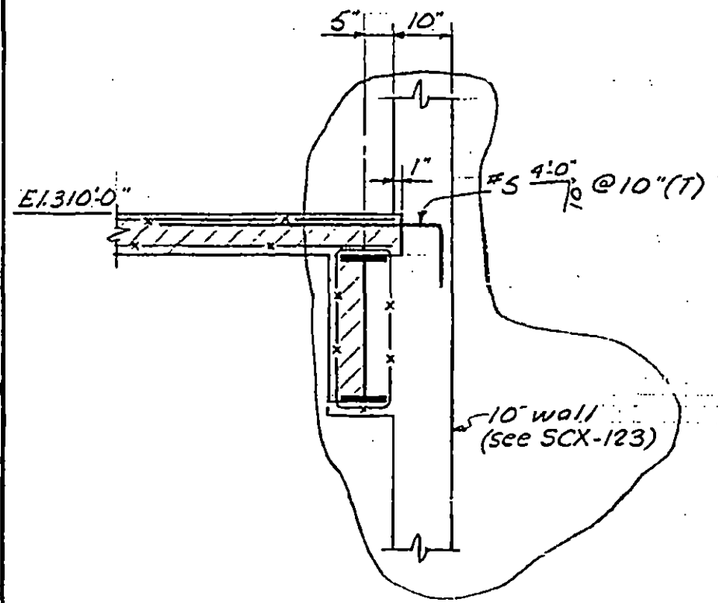

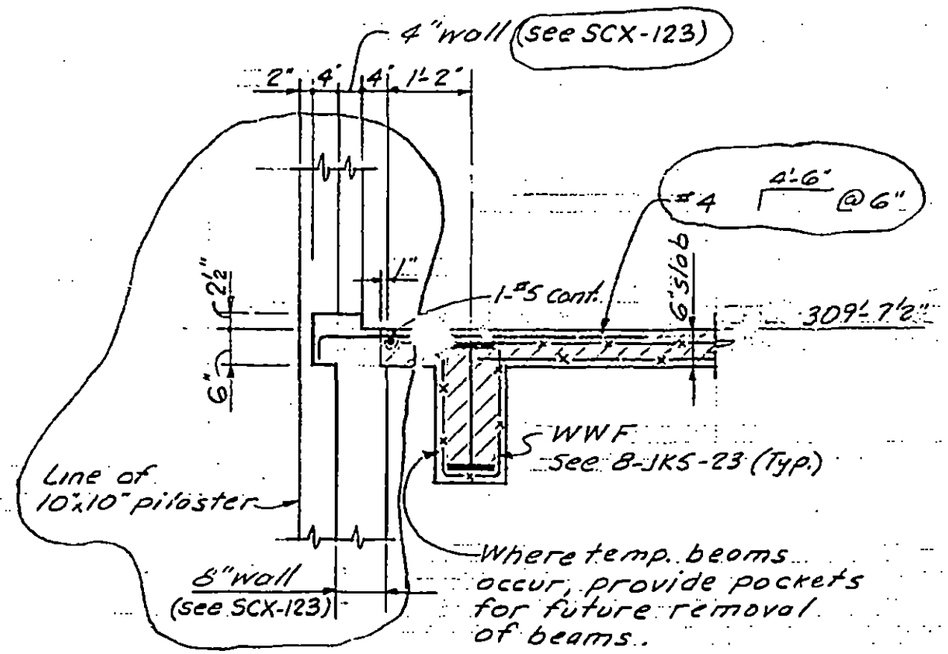

Section P-P
(1/2" = 1'-0")

LICENSED PROFESSIONAL ENGINEER
LESLIE E. ROBERTSON
No. 34360
STATE OF THE STATE OF NEW YORK

DESIGNED

DRAWN
S.C.

REVIEWED
E.L.

8-JK8-35

SKILLING, HELLE, CHRISTIANSEN, ROBERTSON — Structural & Civil Engineers

PROJECT THE WORLD TRADE CENTER | TITLE SECTIONS | DATE 4-28-70

REVISIONS

5-15-70

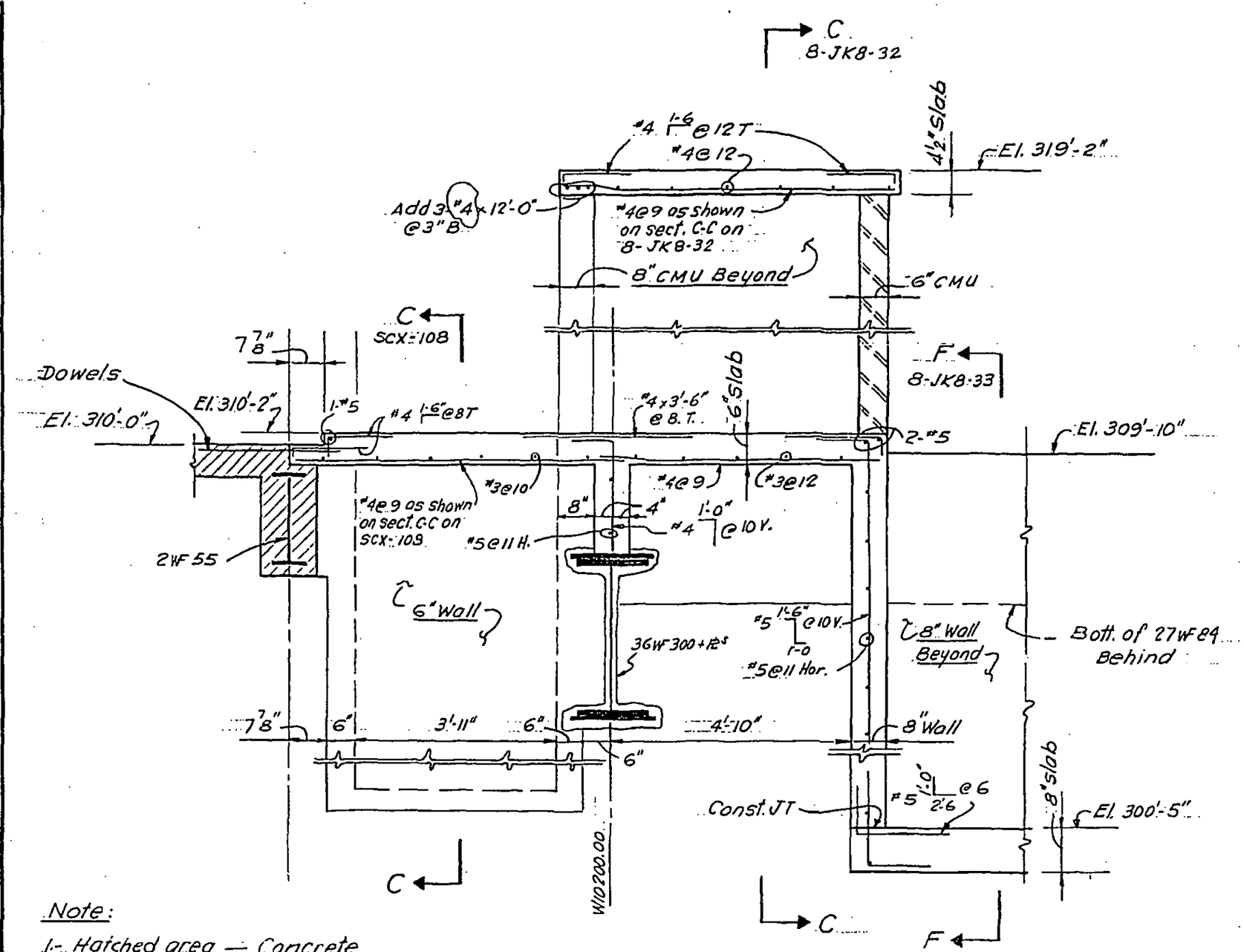

Note:

1.- Hatched area — Concrete already in place

Section N-N

(½" = 1'-0")

8-JK8-35.1

LICENSED PROFESSIONAL ENGINEER — LESLIE E. ROBERTSON — No. 34360 — UNIVERSITY OF THE STATE OF NEW YORK

DESIGNED

DRAWN V.H.A

REVIEWED E.L.

SKILLING, HELLE, CHRISTIANSEN, ROBERTSON — Structural & Civil Engineers

PROJECT: THE WORLD TRADE CENTER | TITLE: SECTIONS | DATE: 10-21-68

REVISIONS
12-9-68
12-18-68
1-17-69
4-28-70
6-15-73
9-25-73

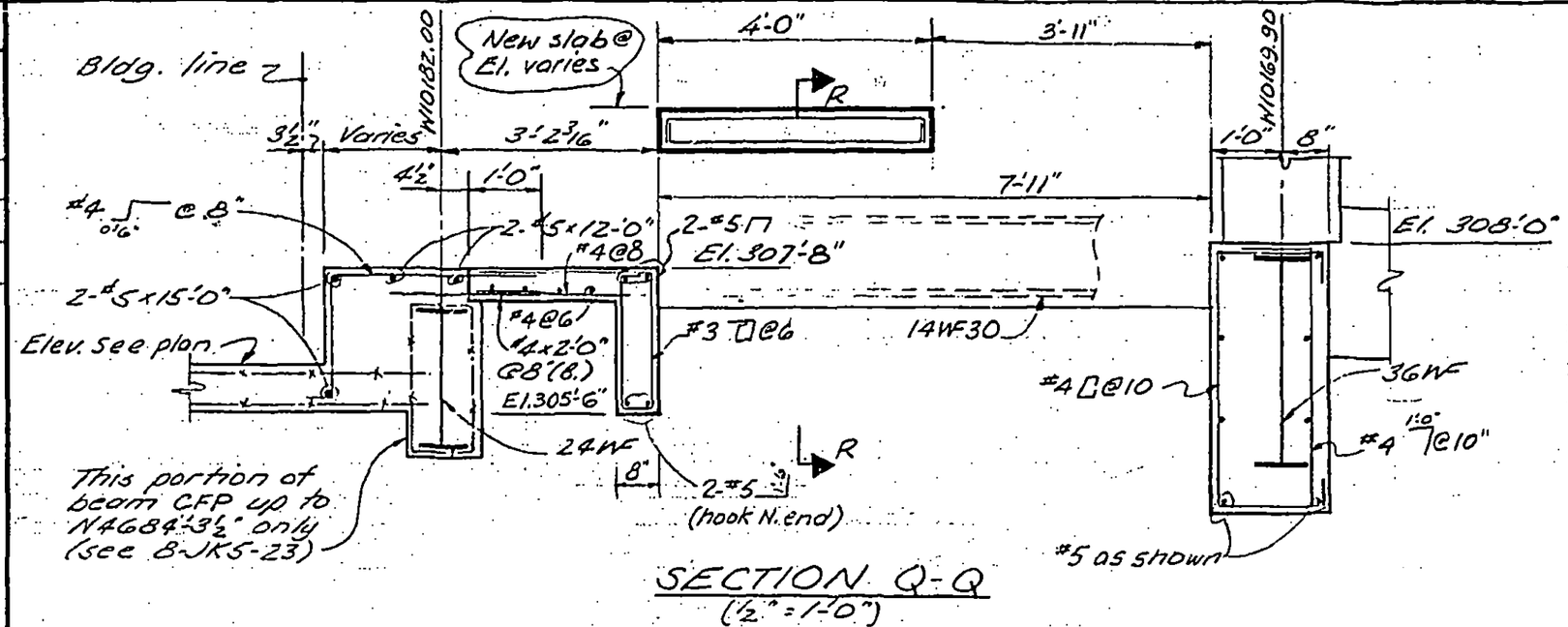

SECTION Q-Q
(½" = 1'-0")

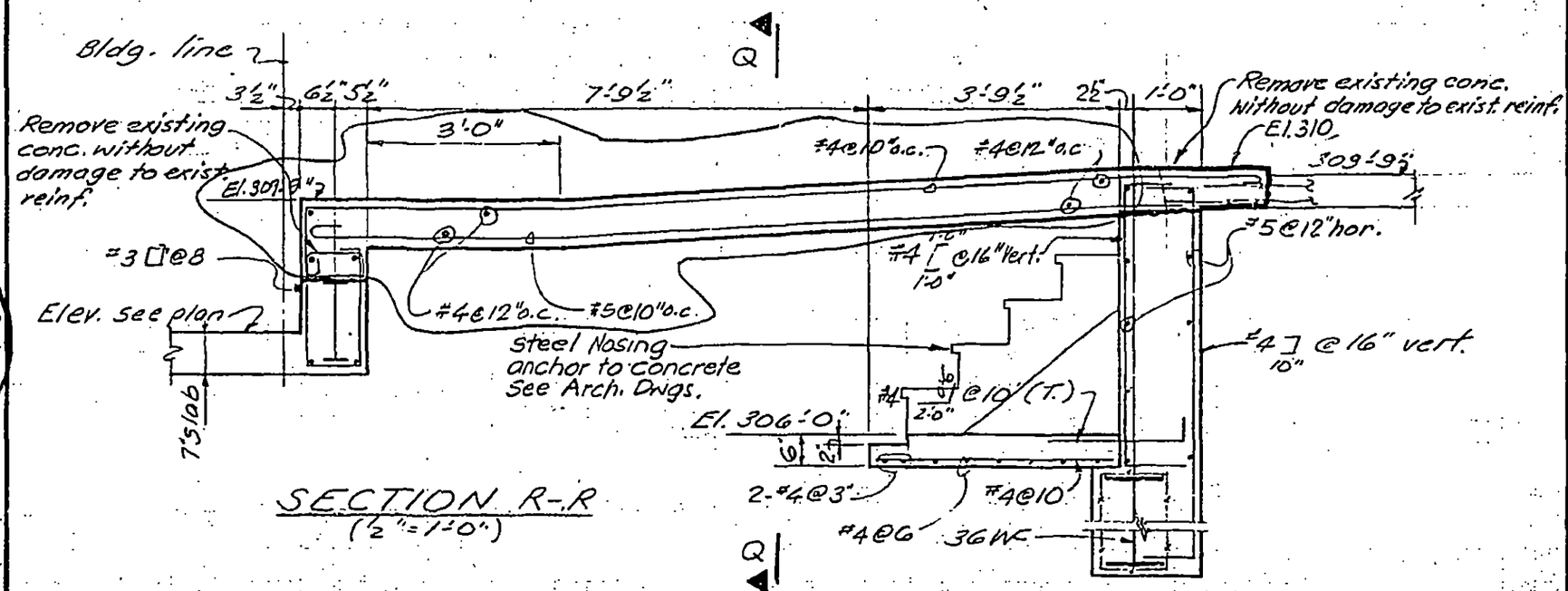

SECTION R-R
(½" = 1'-0")

LICENSED PROFESSIONAL ENGINEER — LESLIE E. ROBERTSON — No. 34360 — UNIVERSITY OF THE STATE OF NEW YORK

DESIGNED
DRAWN S.C.
REVIEWED J.M. & E.L.

6-JK8-36.1

SCALE

REVISIONS

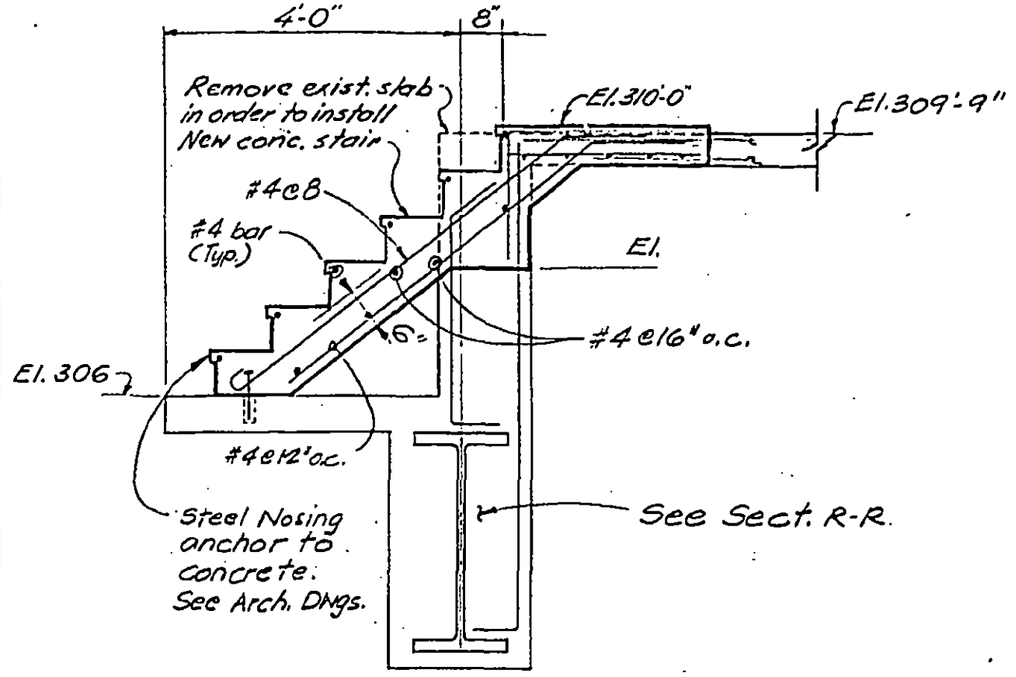

Section RR-RR

DESIGNED RC	PROJECT THE WORLD TRADE CENTER	TITLE SECTIONS AT STAIR K-1A EL. 310	DATE 6-15-73
DRAWN John Siciliano	SKILLING, HELLE, CHRISTIANSEN, ROBERTSON Structural & Civil Engineers		DWG. NO. 8-JKB-36.2
REVIEWED [illegible]			

SKILLING, HELLE, CHRISTIANSEN, ROBERTSON — Structural & Civil Engineers

PROJECT THE WORLD TRADE CENTER | TITLE SECTIONS | DATE 10-21-68

REVISIONS
12-4-68
12-18-68
4-28-70

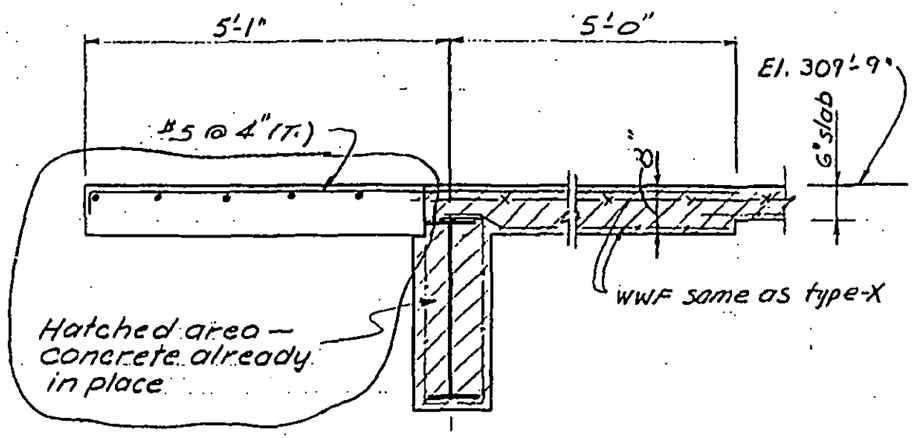

Section T-T
(½" = 1'-0")

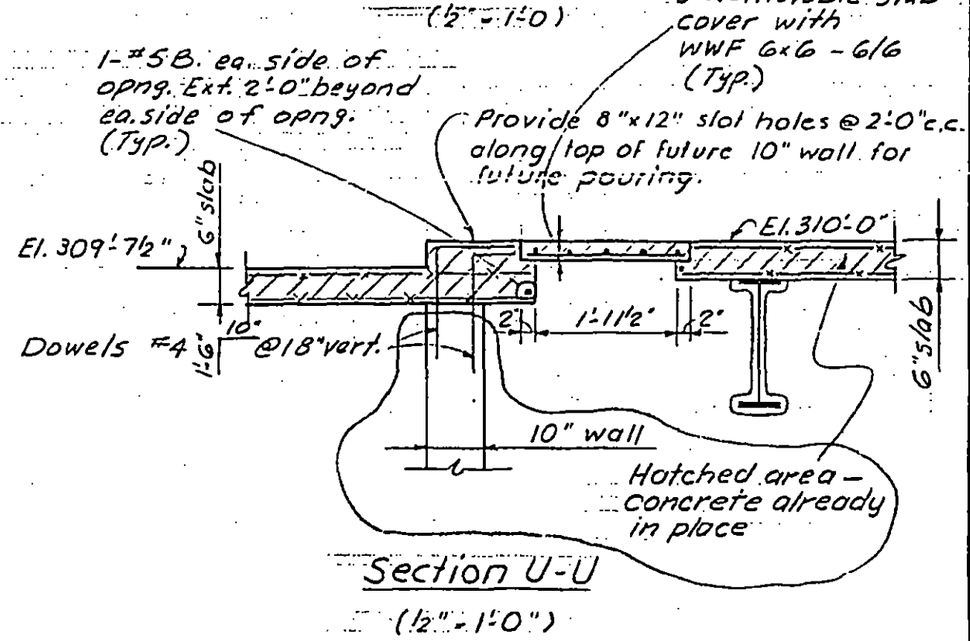

Section U-U
(½" = 1'-0")

LICENSED PROFESSIONAL ENGINEER — LESLIE E. ROBERTSON — No. 34360 — UNIVERSITY OF THE STATE OF NEW YORK

DESIGNED
DRAWN S.C.
REVIEWED J.M. & E.L

8-JK8-37.1

SKILLING, HELLE, CHRISTIANSEN, ROBERTSON — Structural & Civil Engineers

PROJECT: THE WORLD TRADE CENTER | TITLE: SECTIONS | DATE: 12-18-68

REVISIONS
2-19-69
3-15-73

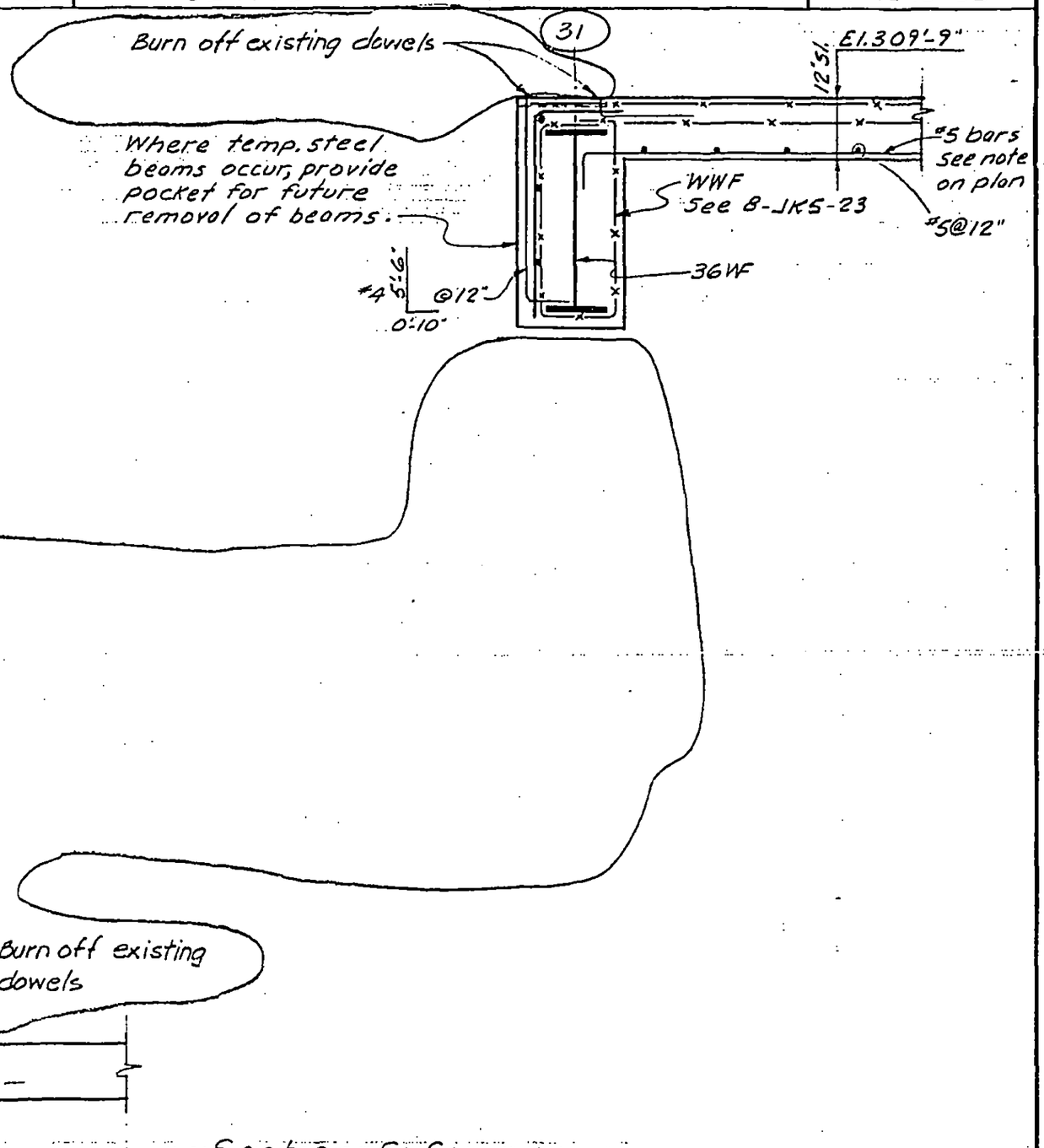

Section S-S

LICENSED PROFESSIONAL ENGINEER
LESLIE E. ROBERTSON
No. 34360
UNIVERSITY OF THE STATE OF NEW YORK

DESIGNED
DRAWN S.C.
REVIEWED J.M. & E.L.

8-JK8-37.2

SKILLING, HELLE, CHRISTIANSEN, ROBERTSON — Structural & Civil Engineers

PROJECT: THE WORLD TRADE CENTER | TITLE: SECTIONS | DATE: 10-21-68

REVISIONS
12-9-68
4-28-70

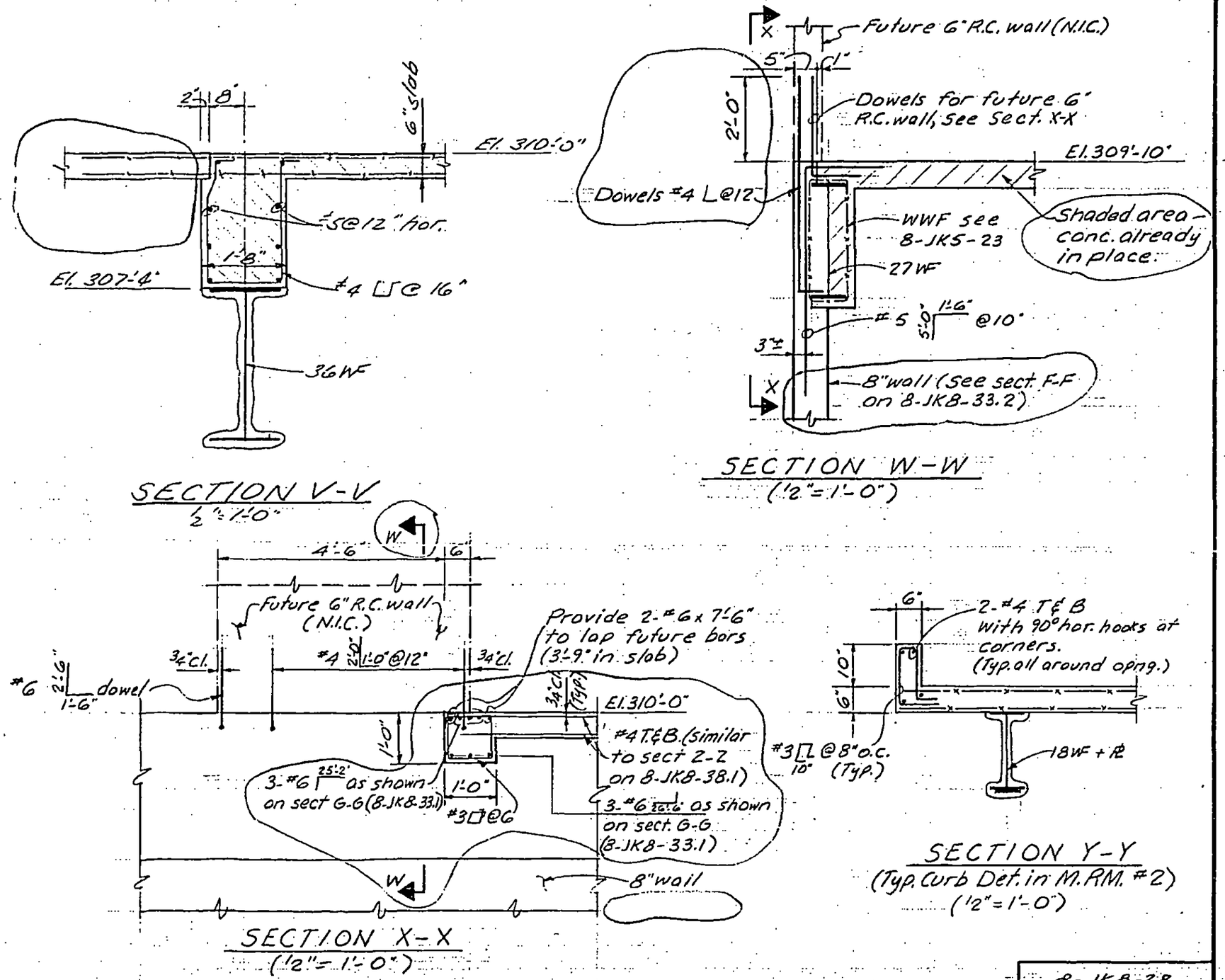

DESIGNED

DRAWN S.C.

REVIEWED E.L.

8-JK8-38

SKILLING, HELLE, CHRISTIANSEN, ROBERTSON — Structural & Civil Engineers

PROJECT: THE WORLD TRADE CENTER | TITLE: SECTIONS | DATE: 4-28-70

REVISIONS

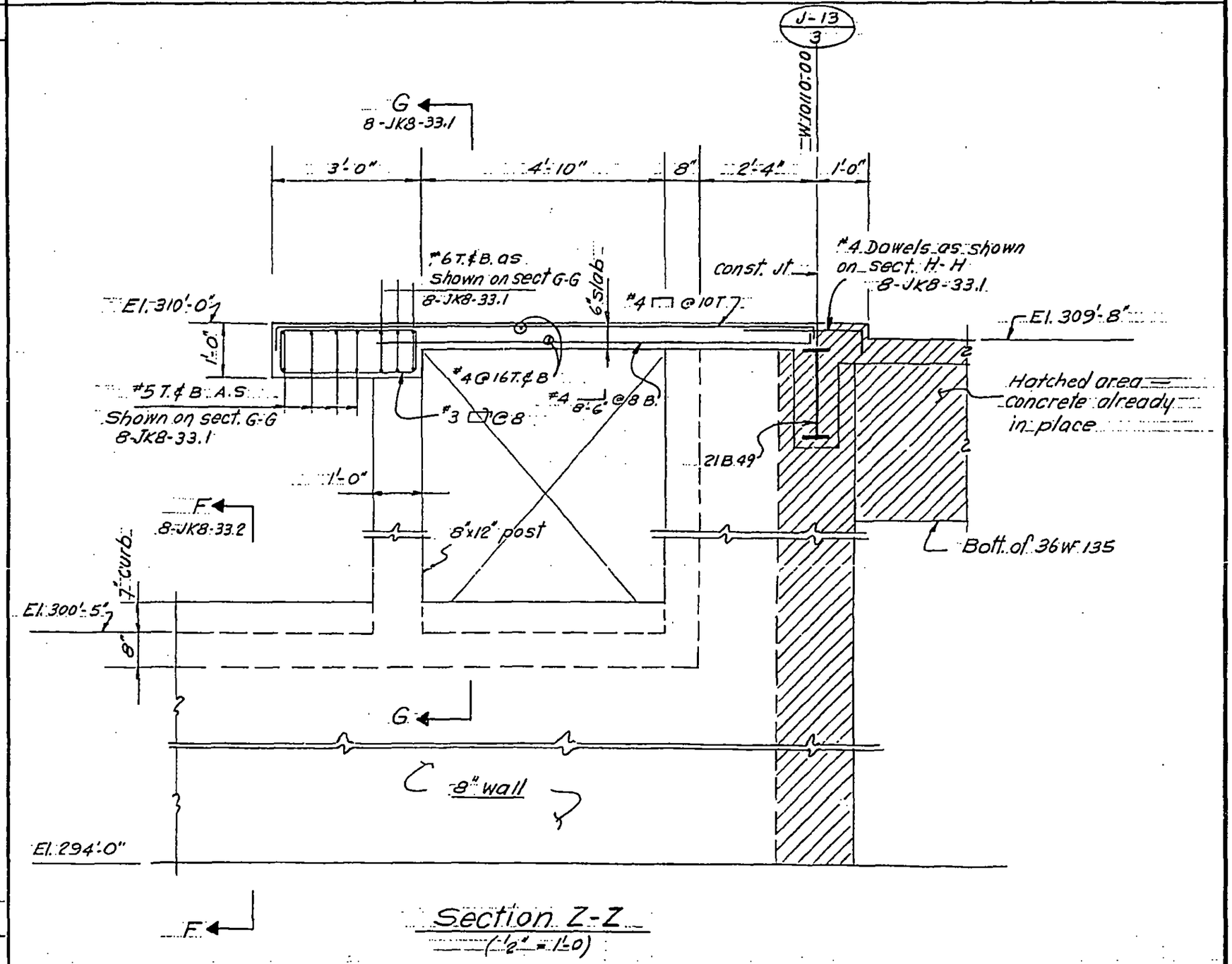

Section Z-Z
(½" = 1'-0)

LICENSED PROFESSIONAL ENGINEER — LESLIE E. ROBERTSON — No. 34380 — UNIVERSITY OF THE STATE OF NEW YORK

DESIGNED

DRAWN: V.H.A.

REVIEWED: E.L.

8-JK8-38.1

SKILLING, HELLE, CHRISTIANSEN, ROBERTSON — Structural & Civil Engineers

PROJECT THE WORLD TRADE CENTER | TITLE SECTIONS AT EL. 257'-0" | DATE 5-27-69

REVISIONS

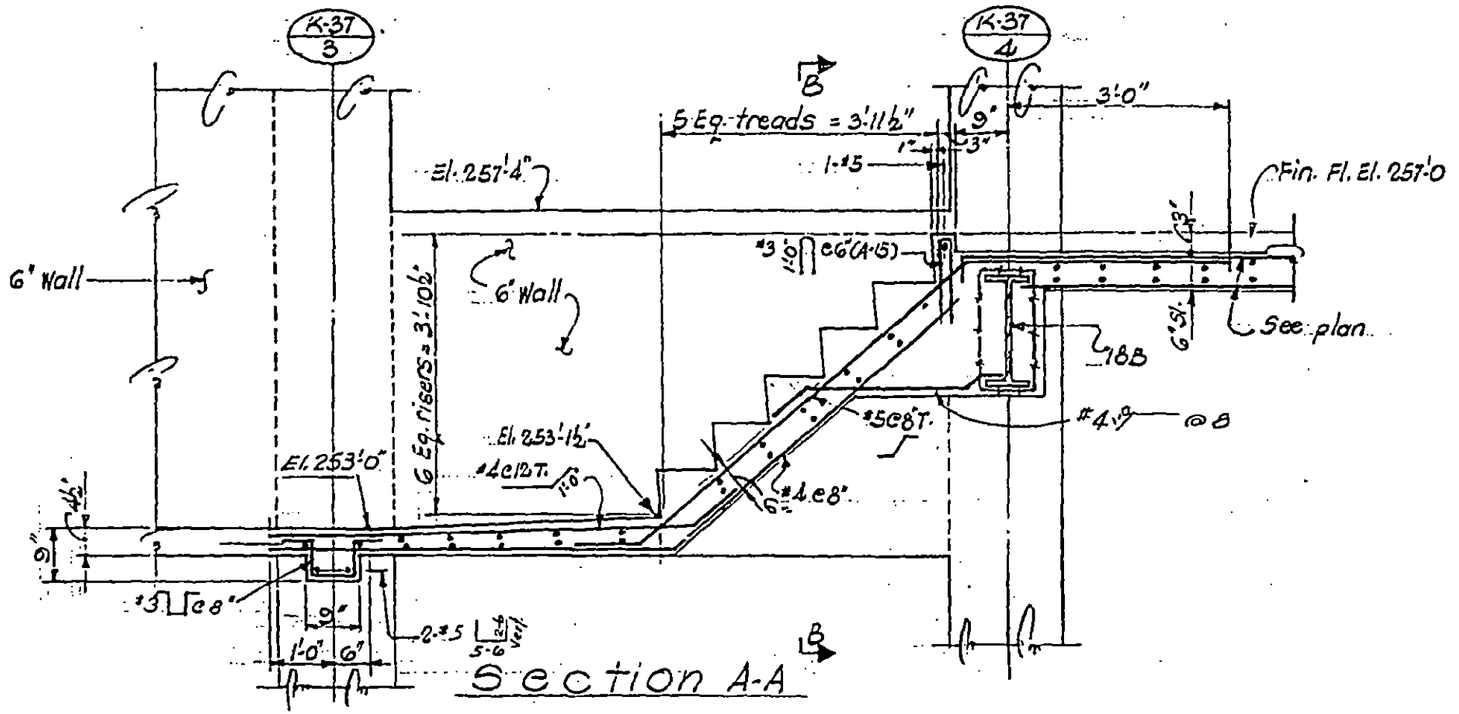

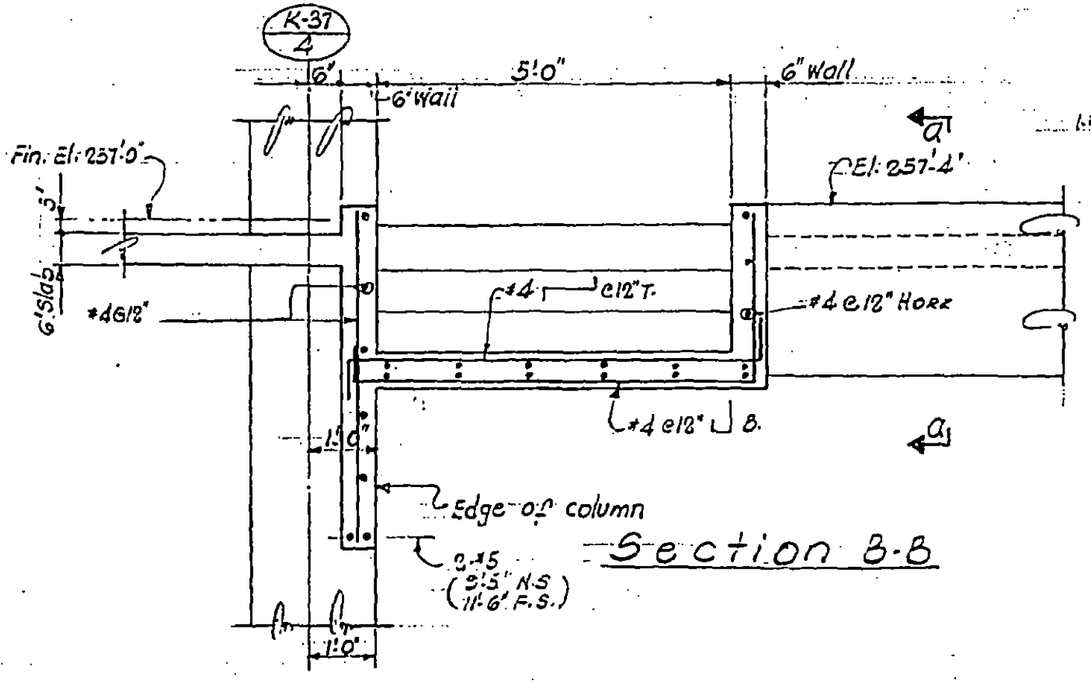

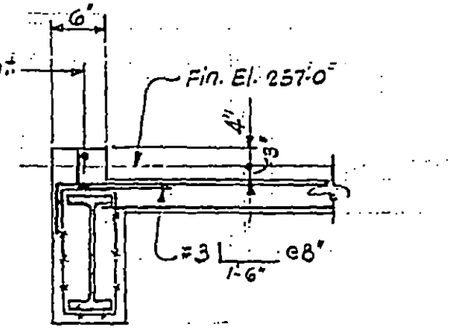

LICENSED PROFESSIONAL ENGINEER — LESLIE E. ROBERTSON — No. 34360 — UNIVERSITY OF THE STATE OF NEW YORK

DESIGNED

DRAWN S.T.M.

REVIEWED

8-JK8-39.1

SKILLING, HELLE, CHRISTIANSEN, ROBERTSON — Structural & Civil Engineers

PROJECT: THE WORLD TRADE CENTER | TITLE: SECTIONS AT EL. 257'-0" | DATE: 12-18-68

REVISIONS

5-27-69

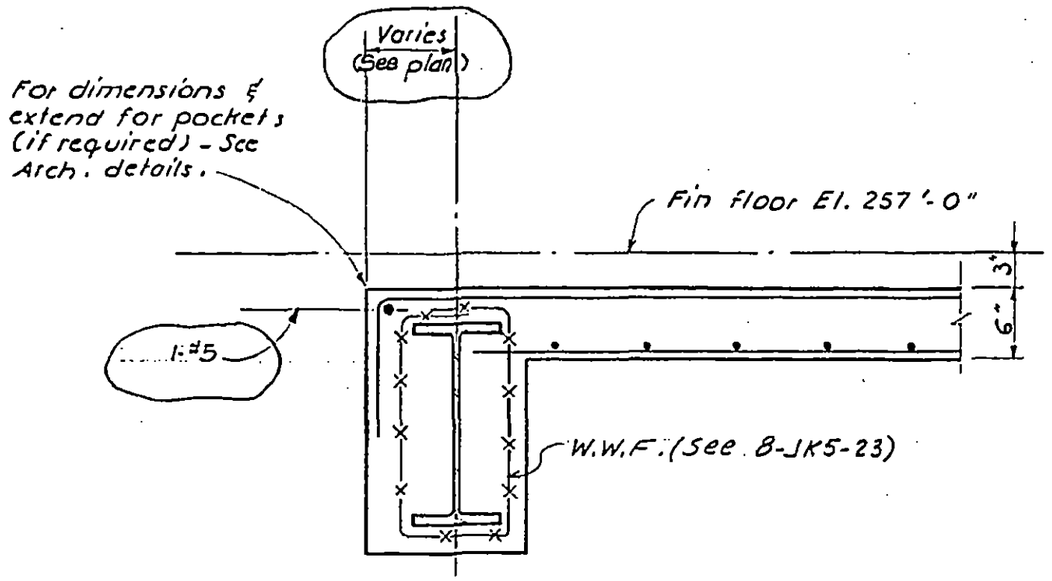

Section C-C

LICENSED PROFESSIONAL ENGINEER
LESLIE E. ROBERTSON
No. 34360
UNIVERSITY OF THE STATE OF NEW YORK

DESIGNED

DRAWN
S.C.

REVIEWED
J.M. & E.L.

8-JK8-39.2

SKILLING, HELLE, CHRISTIANSEN, ROBERTSON — Structural & Civil Engineers

PROJECT: THE WORLD TRADE CENTER | TITLE: SECTIONS AT EL. 257'-0" | DATE: 12-18-68

REVISIONS

5-27-69

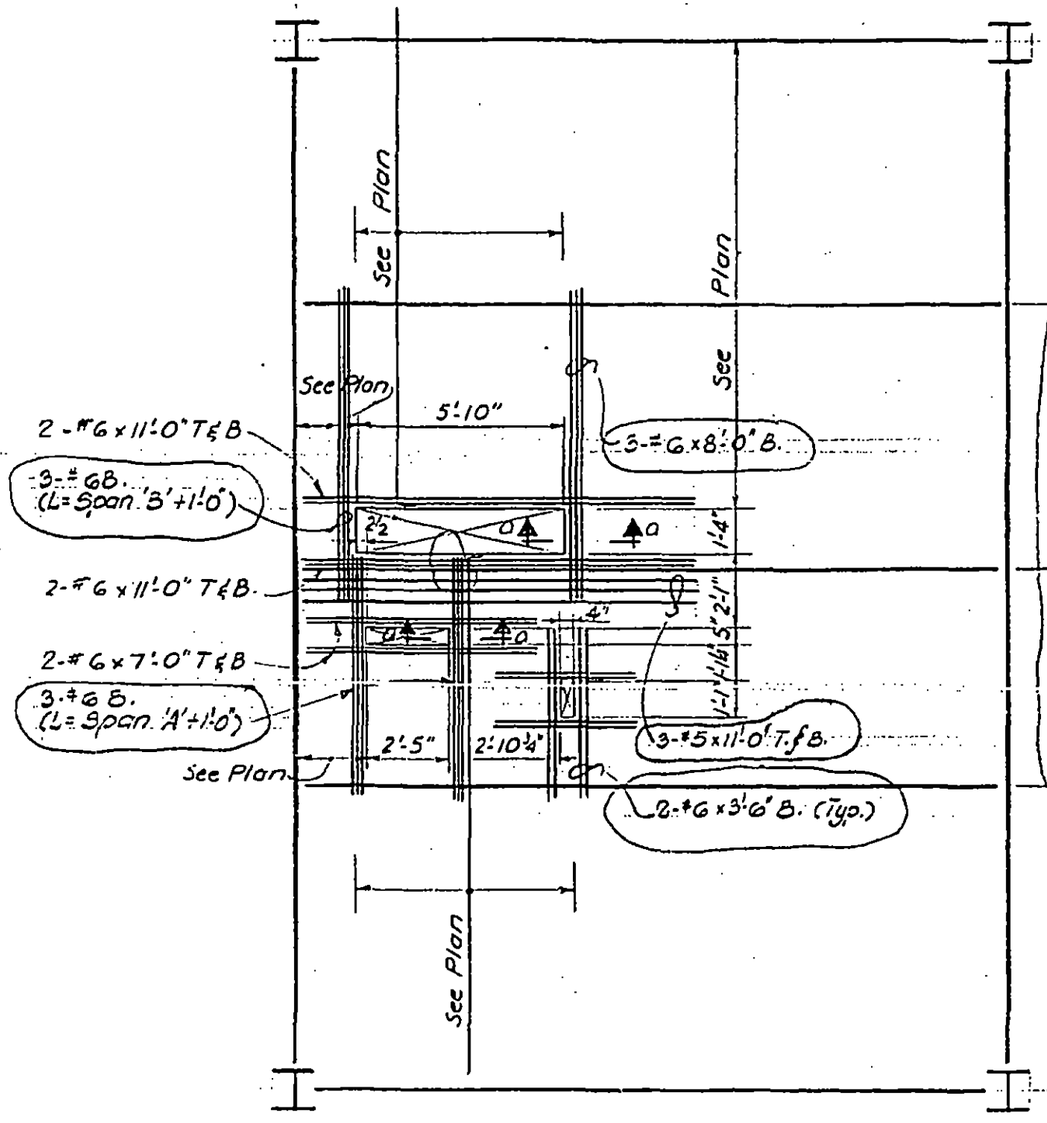

Detail D (Typ.)

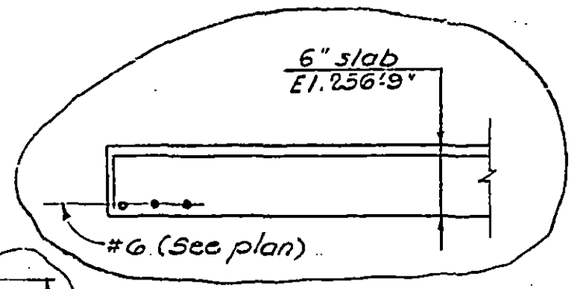

Section a-a
(Typ.)

NOTES:

1. For additional reinforcing, see plan.
2. For steel framing and exact location of openings, see plan & Mech. drawings.

LICENSED PROFESSIONAL ENGINEER
LESLIE E. ROBERTSON
No. 34360
UNIVERSITY OF THE STATE OF NEW YORK

DESIGNED

DRAWN: S.C.

REVIEWED: J.M. & E.L.

8-JK8-39.3

SKILLING, HELLE, CHRISTIANSEN, ROBERTSON — Structural & Civil Engineers

PROJECT: THE WORLD TRADE CENTER | TITLE: SECTIONS EL. 257'-0" | DATE: 12-18-68

REVISIONS

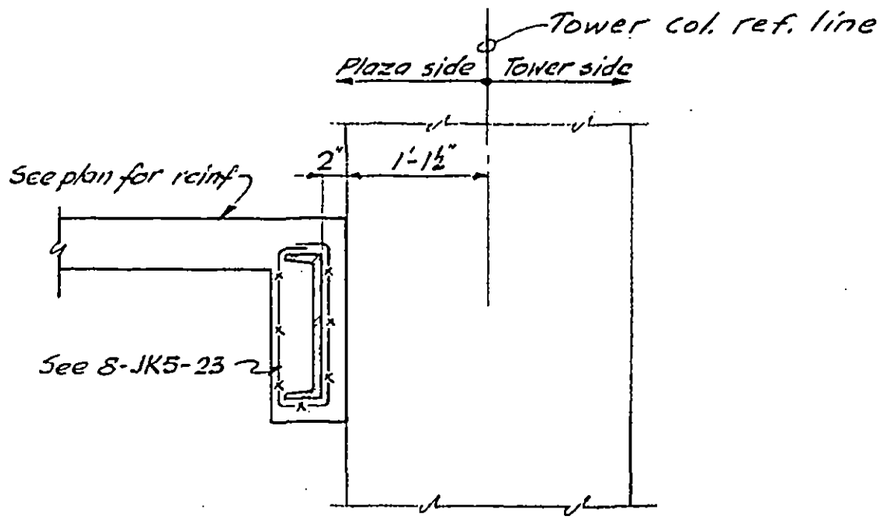

Section E-E

LICENSED PROFESSIONAL ENGINEER
LESLIE E. ROBERTSON
No. 34360
UNIVERSITY OF THE STATE OF NEW YORK

DESIGNED

DRAWN S.C.

REVIEWED J.M. & E.L.

8-JK8-39.4

SKILLING, HELLE, CHRISTIANSEN, ROBERTSON — Structural & Civil Engineers

PROJECT THE WORLD TRADE CENTER | TITLE SECTION AT EL. 257' | DATE 12-18-68

REVISIONS

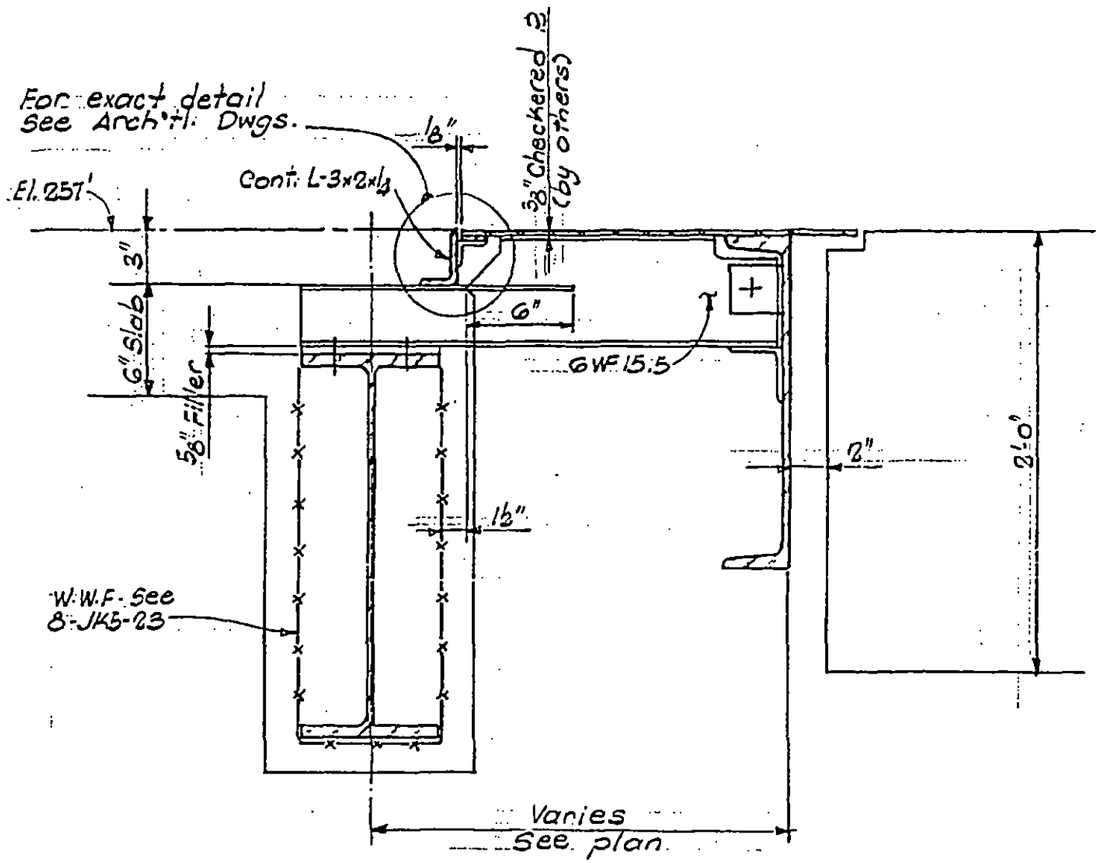

Section F-F

LICENSED PROFESSIONAL ENGINEER
LESLIE E. ROBERTSON
No. 34360
UNIVERSITY OF THE STATE OF NEW YORK

DESIGNED

DRAWN
S.C.

REVIEWED
J.M. & E.L.

8-JK8-39.5

SKILLING, HELLE, CHRISTIANSEN, ROBERTSON — Structural & Civil Engineers

PROJECT THE WORLD TRADE CENTER | TITLE SECTION AT EL. 257' | DATE 12-18-68

REVISIONS

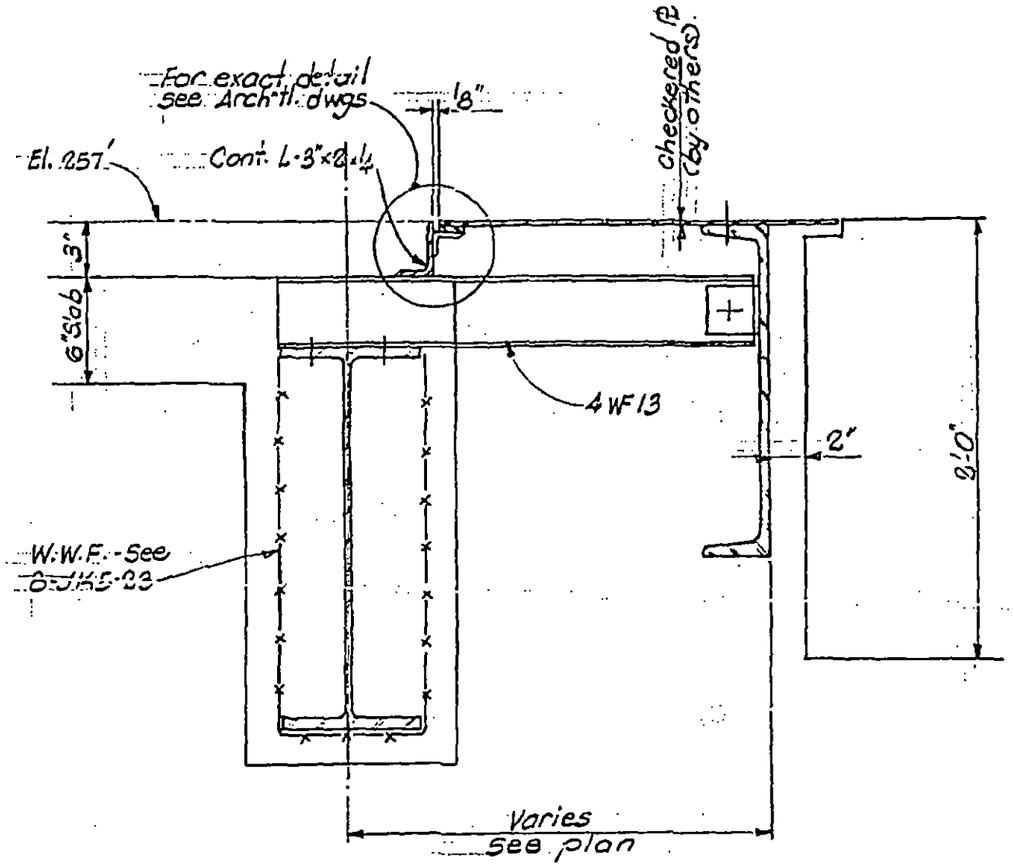

Section G-G

LICENSED PROFESSIONAL ENGINEER
LESLIE E. ROBERTSON
No. 34360
UNIVERSITY OF THE STATE OF NEW YORK

DESIGNED

DRAWN S.C.

REVIEWED J.M. & E.L.

S-JK8-39.6

SKILLING, HELLE, CHRISTIANSEN, ROBERTSON — Structural & Civil Engineers

PROJECT THE WORLD TRADE CENTER | TITLE SECTIONS AT EL. 250'-0" | DATE 11-13-69

REVISIONS

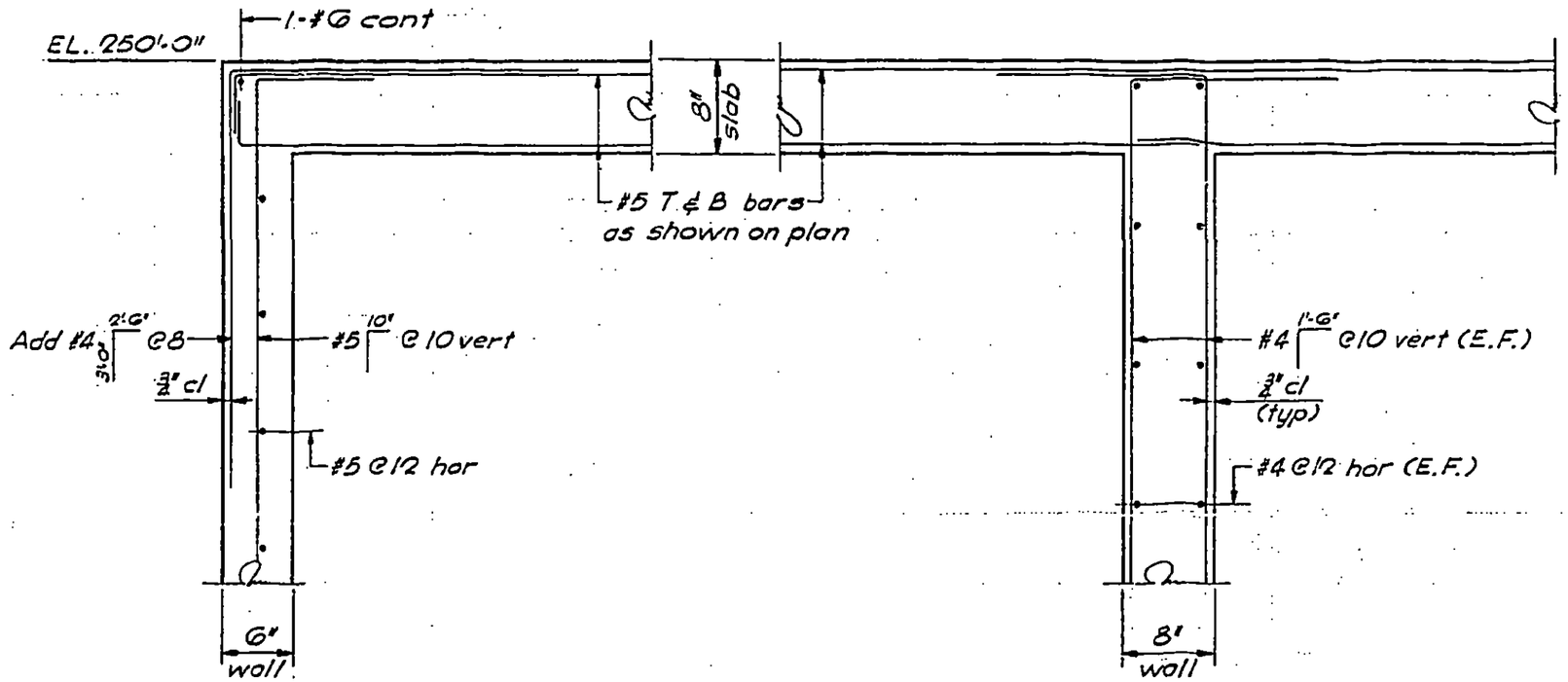

SECTION H-H
(1"=1'-0")

SECTION J-J
(1"=1'-0")

LICENSED PROFESSIONAL ENGINEER
LESLIE E. ROBERTSON
No. 34360
UNIVERSITY OF THE STATE OF NEW YORK

DESIGNED

DRAWN G.K.

REVIEWED E.L.

8-UK8-39.7

SKILLING, HELLE, CHRISTIANSEN, ROBERTSON — Structural & Civil Engineers

PROJECT THE WORLD TRADE CENTER | TITLE SECTIONS AT EL. 250'-0" | DATE 11-13-69

REVISIONS

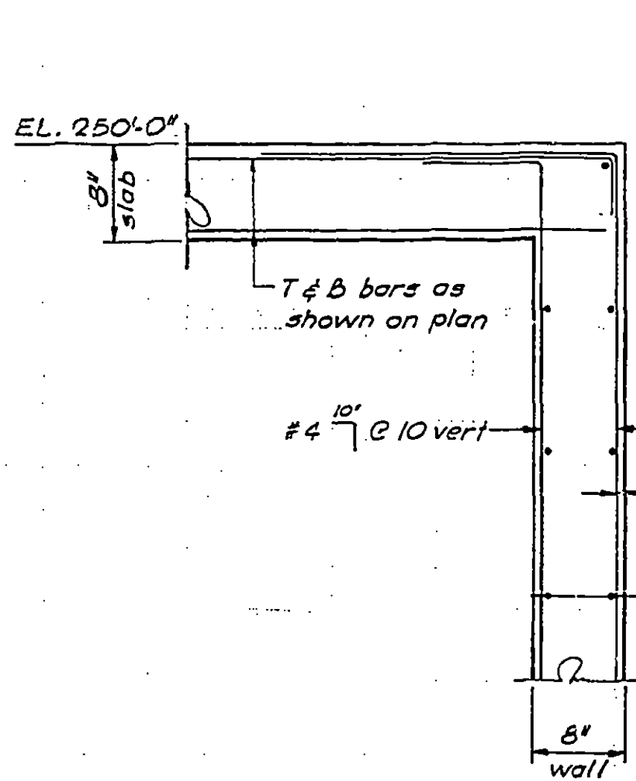

SECTION K-K
(1" = 1'-0")

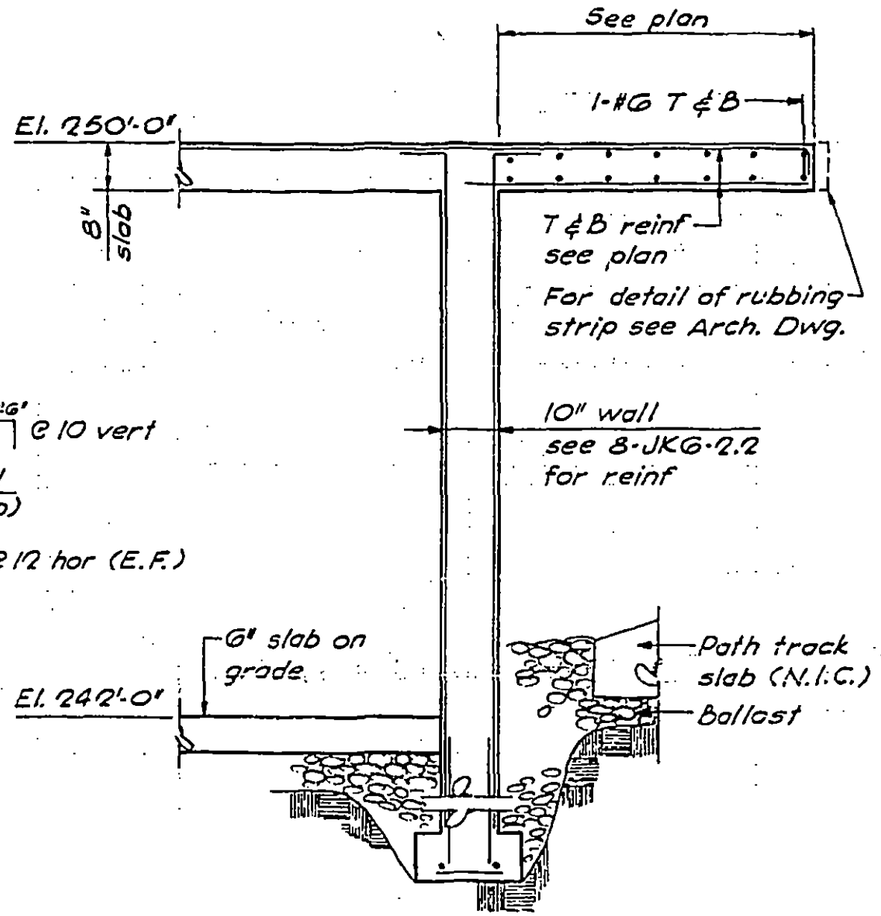

SECTION L-L
(½" = 1'-0")

LICENSED PROFESSIONAL ENGINEER — LESLIE E. ROBERTSON — No 34360 — UNIVERSITY OF THE STATE OF NEW YORK

DESIGNED

DRAWN G.K.

REVIEWED E.L.

8-JK8-39.8

SKILLING, HELLE, CHRISTIANSEN, ROBERTSON — Structural & Civil Engineers

PROJECT: THE WORLD TRADE CENTER | TITLE: SECTIONS AT EL. 310'-0" | DATE: 12-18-68

REVISIONS
5-12-69
6-1-70

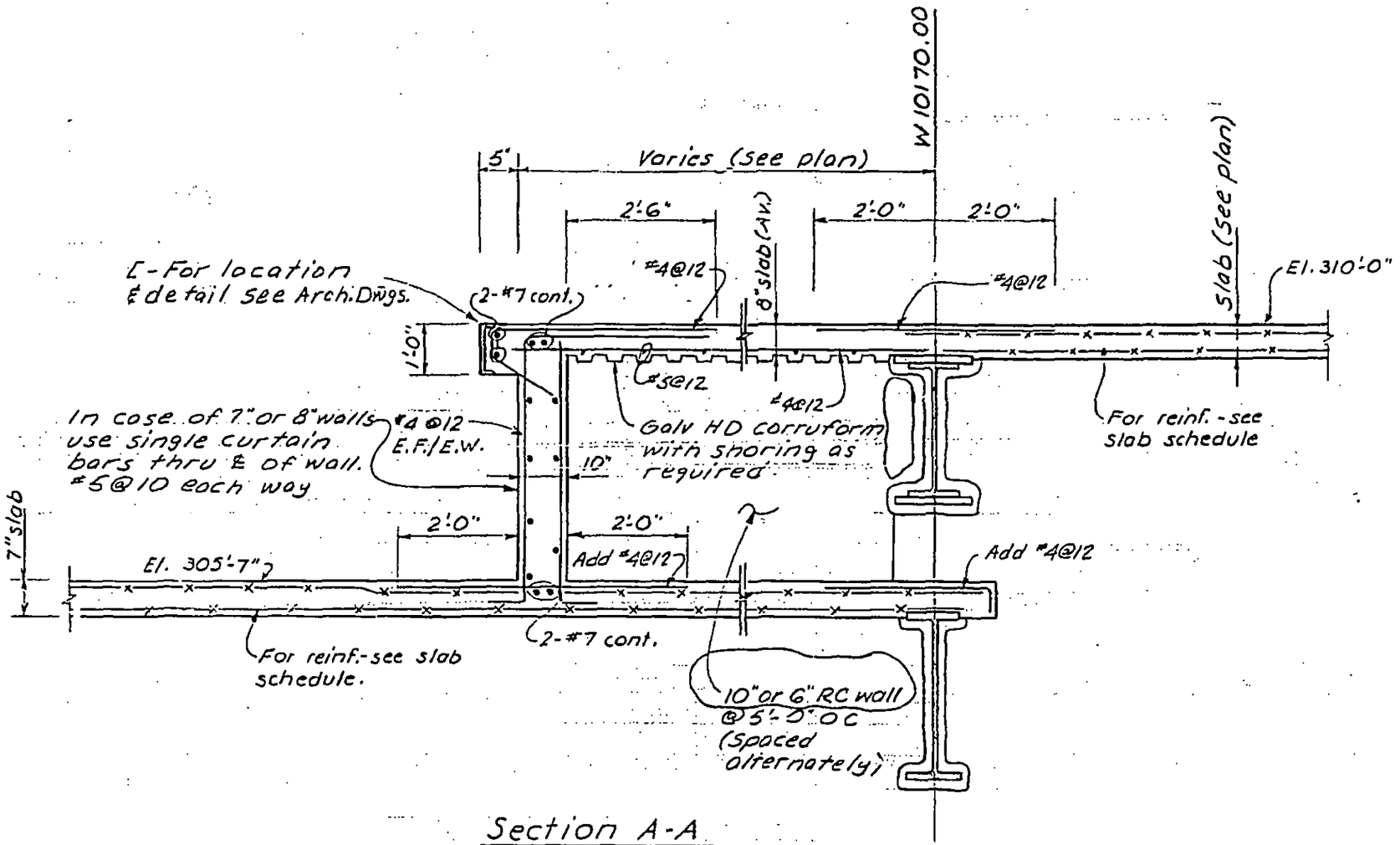

Section A-A

LICENSED PROFESSIONAL ENGINEER
LESLIE E. ROBERTSON
No. 34360
UNIVERSITY OF THE STATE OF NEW YORK

DESIGNED
DRAWN S.C.
REVIEWED J.M. & E.L.

8-JK8-41.1

SKILLING, HELLE, CHRISTIANSEN, ROBERTSON — Structural & Civil Engineers

PROJECT: THE WORLD TRADE CENTER | TITLE: SECTIONS AT EL. 310'-0" | DATE: 12-18-68

REVISIONS
5-12-69
6-1-70

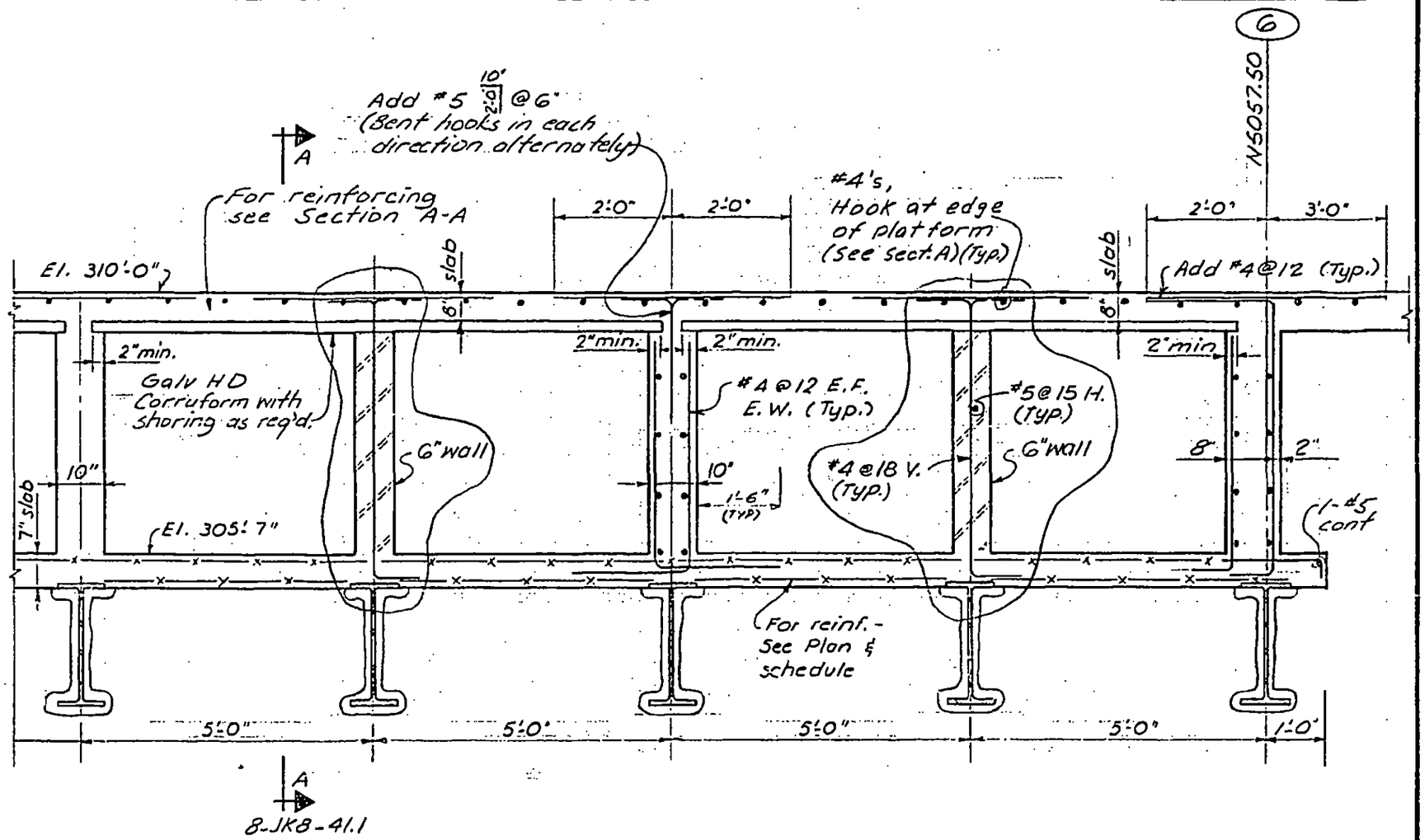

Section B-B

LICENSED PROFESSIONAL ENGINEER
LESLIE E. ROBERTSON
No. 34360
UNIVERSITY OF THE STATE OF NEW YORK

DESIGNED

DRAWN
S.C.

REVIEWED
J.M. & E.L.

8-JK8-41.2

SKILLING, HELLE, CHRISTIANSEN, ROBERTSON — Structural & Civil Engineers

PROJECT THE WORLD TRADE CENTER | TITLE SECTION EL. 310' | DATE 12-18-68

REVISIONS

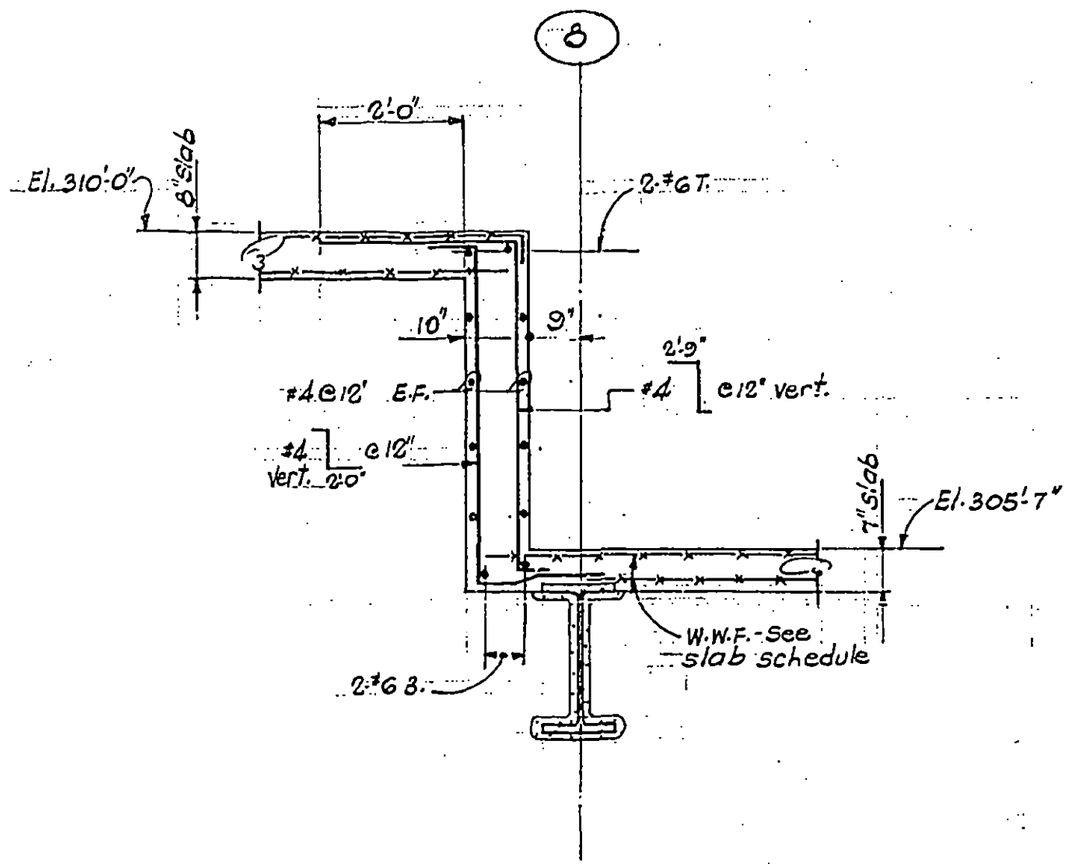

Section C-C

LICENSED PROFESSIONAL ENGINEER
LESLIE E. ROBERTSON
No. 34380
UNIVERSITY OF THE STATE OF NEW YORK

DESIGNED

DRAWN S.T.M.

REVIEWED J.M. & E.L.

8JK8-41.3

SKILLING, HELLE, CHRISTIANSEN, ROBERTSON — Structural & Civil Engineers

PROJECT THE WORLD TRADE CENTER | TITLE SECTIONS AT EL. 310'-0" | DATE 5-12-69

REVISIONS

6-1-70

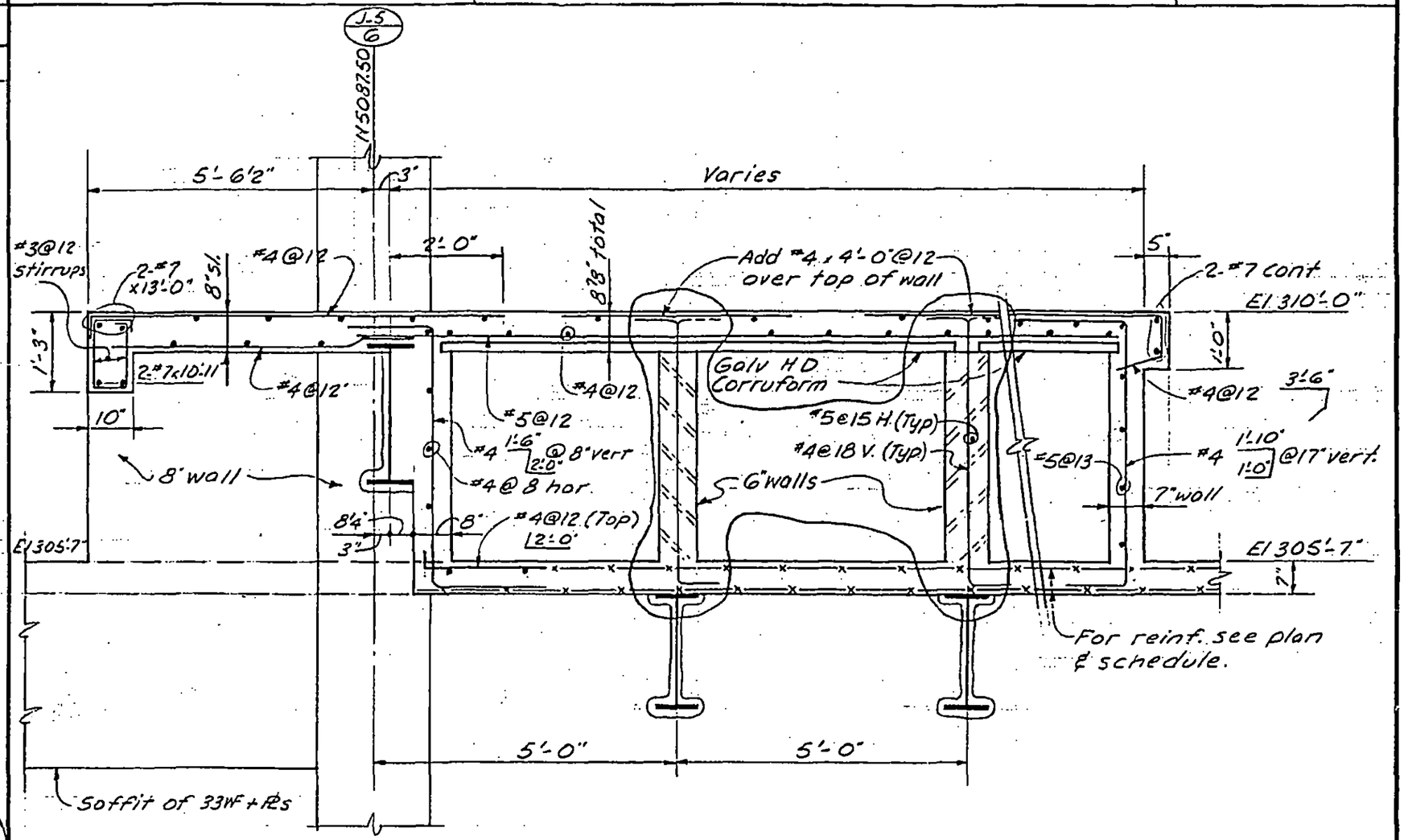

Section D-D

LICENSED PROFESSIONAL ENGINEER
LESLIE E. ROBERTSON
No. 34360
UNIVERSITY OF THE STATE OF NEW YORK

DESIGNED

DRAWN A.F.

REVIEWED E.L.

8-JK8-41.4

SKILLING, HELLE, CHRISTIANSEN, ROBERTSON — Structural & Civil Engineers

PROJECT: THE WORLD TRADE CENTER | TITLE: SECTIONS AT ELEVATION 310'-0" | DATE: 5-12-69

REVISIONS

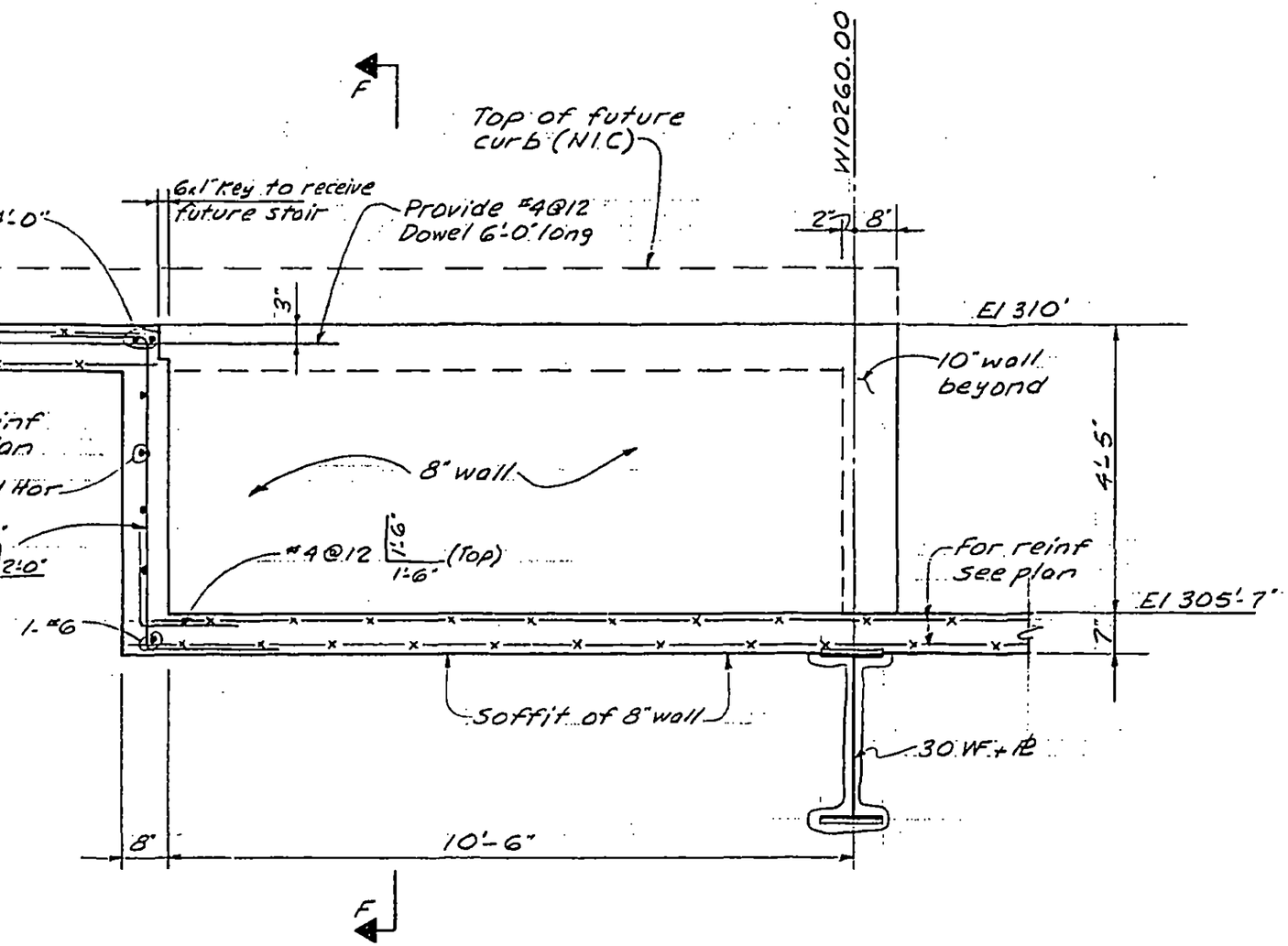

Section E-E

LICENSED PROFESSIONAL ENGINEER
LESLIE E. ROBERTSON
No. 34360
UNIVERSITY OF THE STATE OF NEW YORK

DESIGNED

DRAWN A.F.

REVIEWED E.L.

8-JK8-41.5

SKILLING, HELLE, CHRISTIANSEN, ROBERTSON — Structural & Civil Engineers

PROJECT: THE WORLD TRADE CENTER | TITLE: SECTIONS AT EL 310'-0" | DATE: 5-12-69

REVISIONS

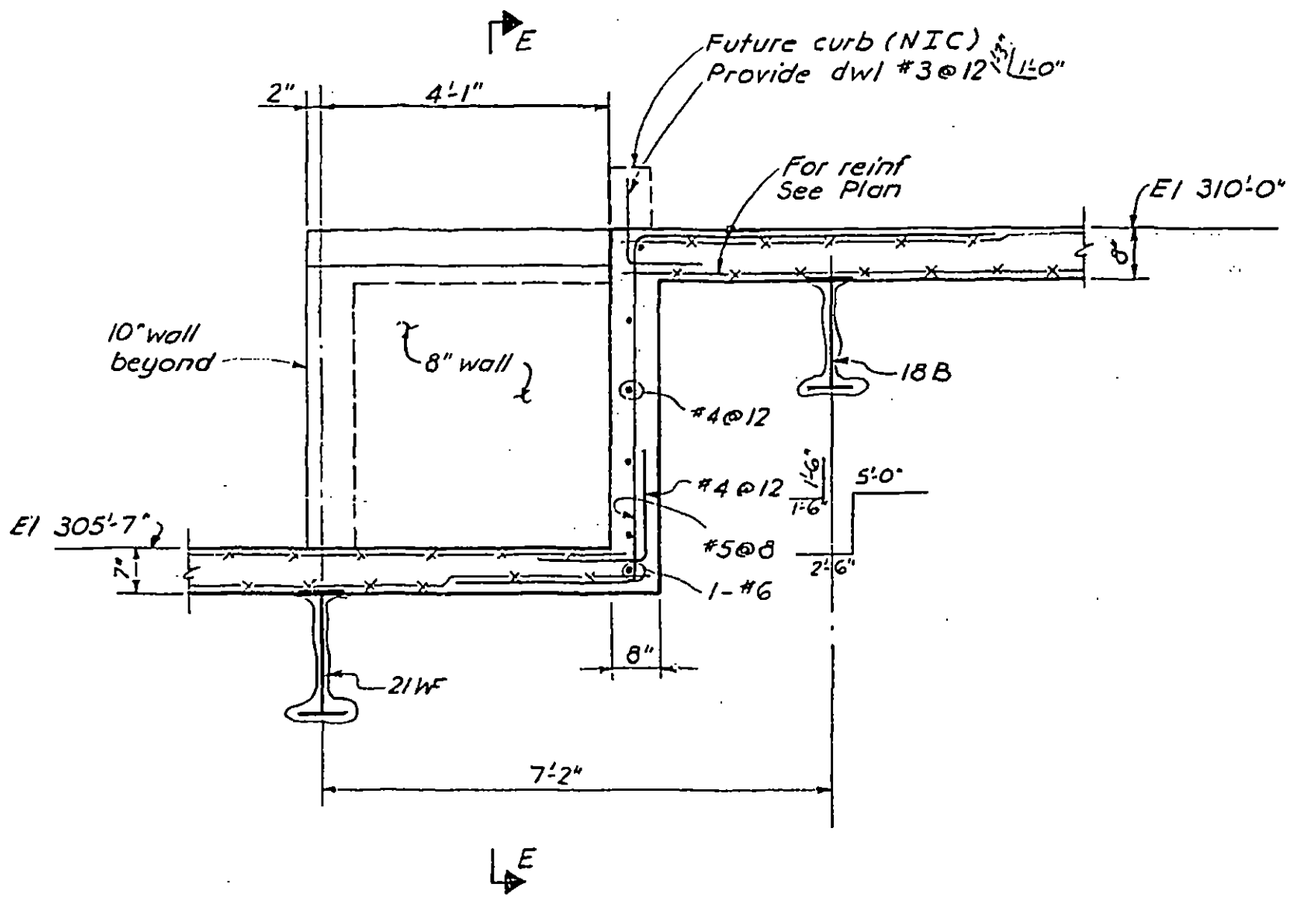

Section F-F

LICENSED PROFESSIONAL ENGINEER
LESLIE E. ROBERTSON
No. 34360
UNIVERSITY OF THE STATE OF NEW YORK

DESIGNED

DRAWN
F. Smith

REVIEWED
E.L.

8-JK8-41.6

SKILLING, HELLE, CHRISTIANSEN, ROBERTSON — Structural & Civil Engineers

PROJECT THE WORLD TRADE CENTER | TITLE SECTIONS AT EL 310'-0" | DATE 5-12-69

REVISIONS

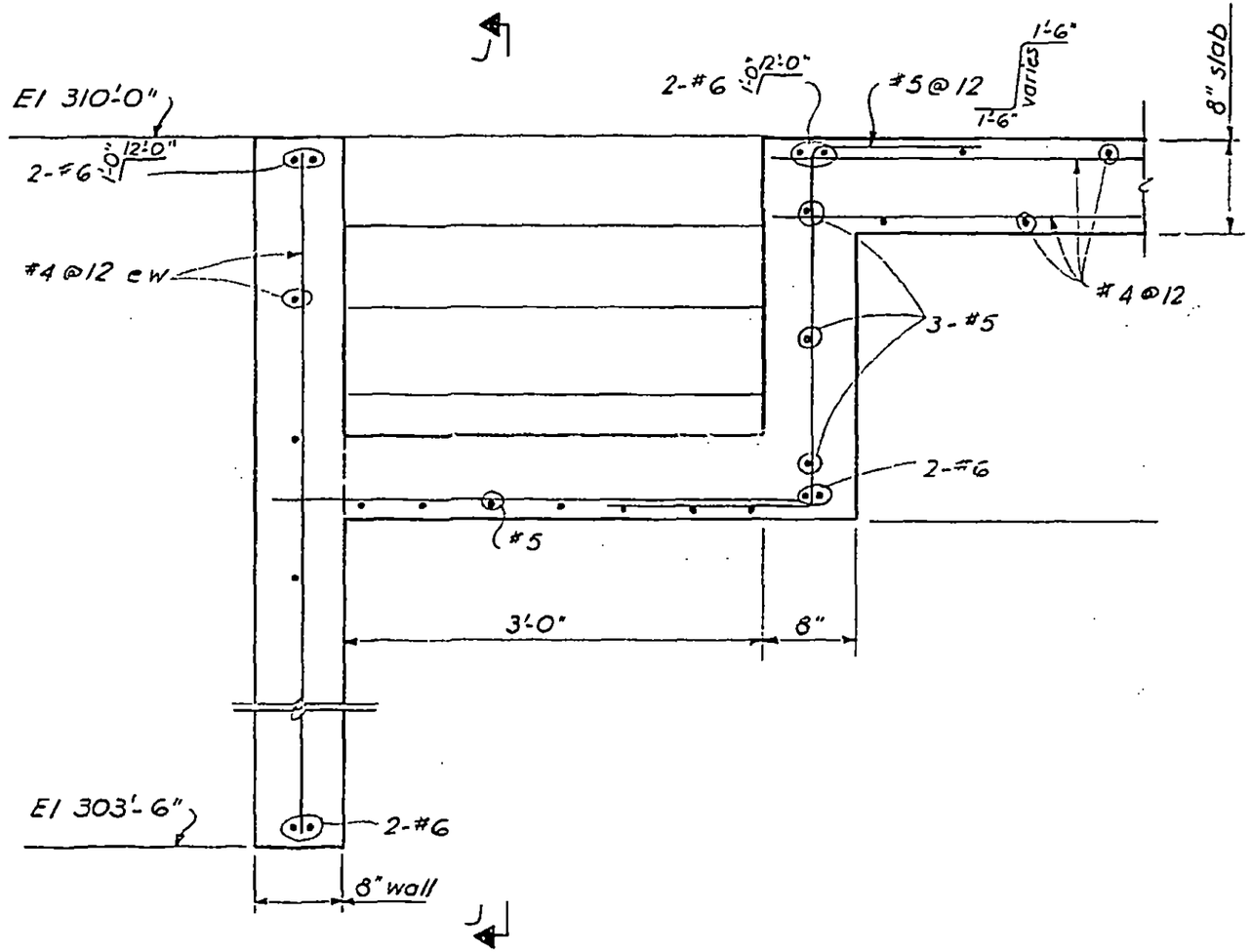

Section H-H

LICENSED PROFESSIONAL ENGINEER — LESLIE E. ROBERTSON — No. 34360 — UNIVERSITY OF THE STATE OF NEW YORK

DESIGNED

DRAWN E. Smith

REVIEWED E.L.

8-JK8-41.7

SKILLING, HELLE, CHRISTIANSEN, ROBERTSON — Structural & Civil Engineers

PROJECT THE WORLD TRADE CENTER | TITLE SECTIONS AT EL. 310'-0" | DATE 5-12-69

REVISIONS

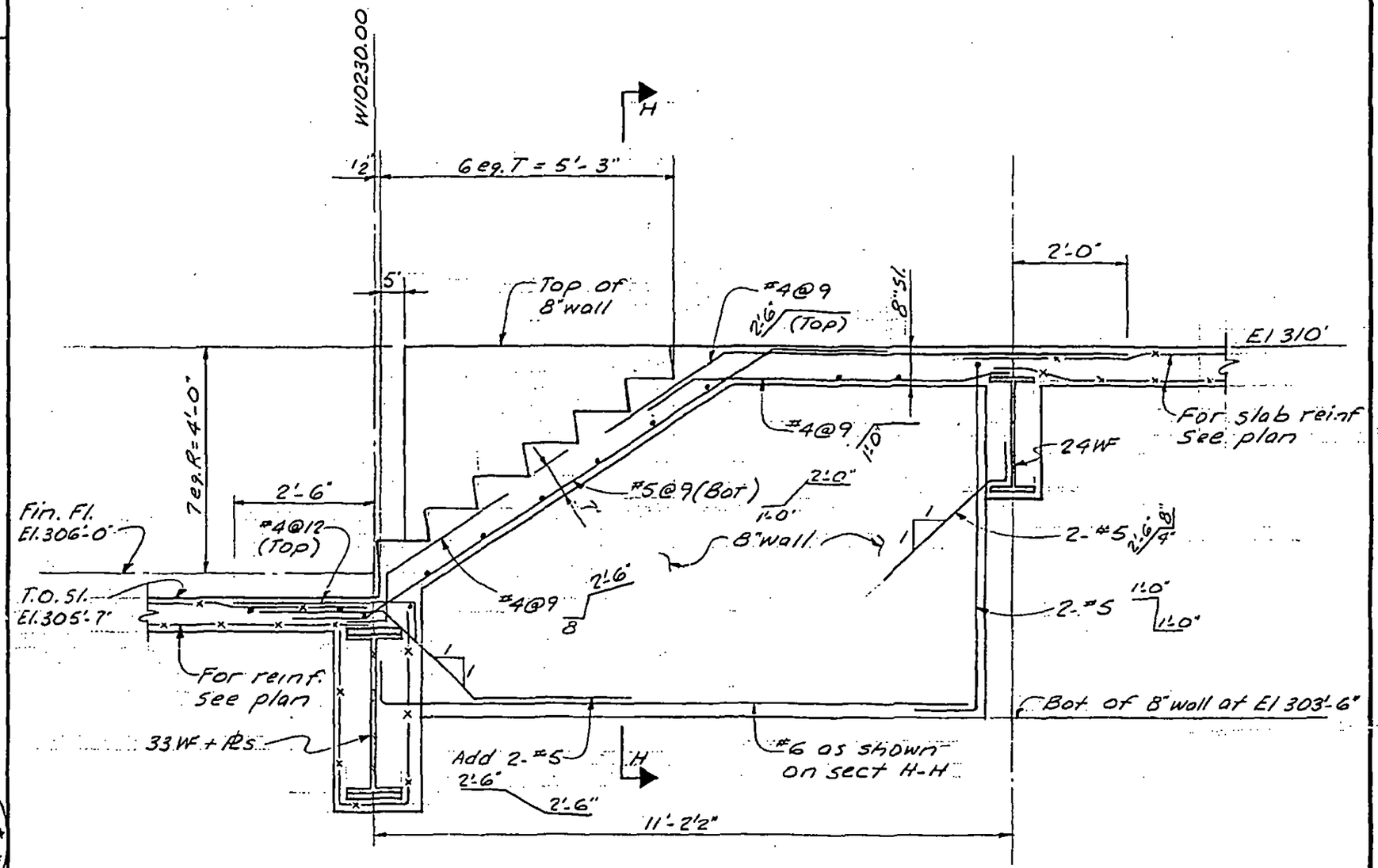

Section J-J

LICENSED PROFESSIONAL ENGINEER — LESLIE E. ROBERTSON — No. 34360 — UNIVERSITY OF THE STATE OF NEW YORK

DESIGNED

DRAWN A.F.

REVIEWED E.L.

8-JK8-41.8

SKILLING, HELLE, CHRISTIANSEN, ROBERTSON — Structural & Civil Engineers

PROJECT THE WORLD TRADE CENTER | TITLE SECTIONS AT EL 310'-0" | DATE 5-12-69

REVISIONS

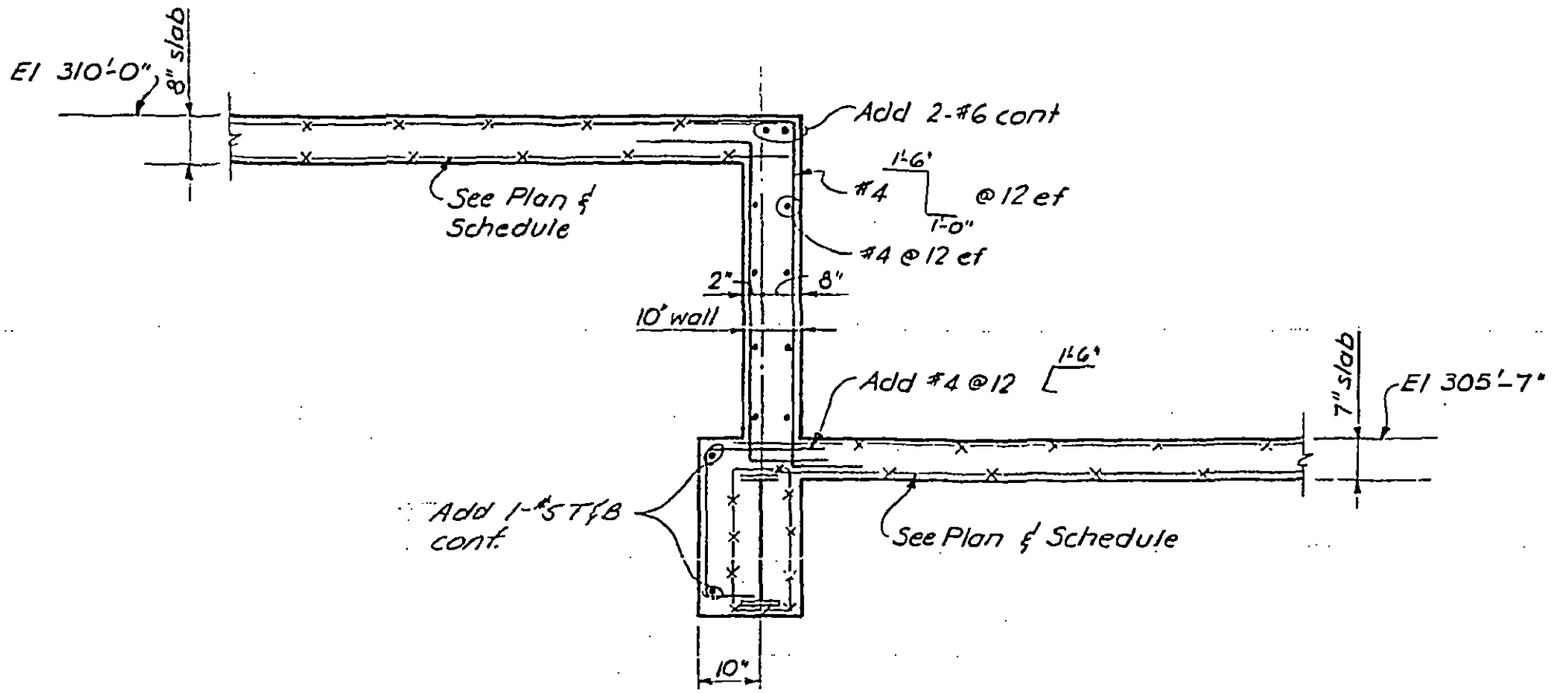

Section K-K

LICENSED PROFESSIONAL ENGINEER — LESLIE E. ROBERTSON — No. 34360 — UNIVERSITY OF THE STATE OF NEW YORK

DESIGNED

DRAWN F. Smith

REVIEWED E.L.

8-JK8-41.9

SKILLING, HELLE, CHRISTIANSEN, ROBERTSON — Structural & Civil Engineers

PROJECT: THE WORLD TRADE CENTER | TITLE: SECTIONS AT ELEVATION 310'-0" | DATE: 5-12-69

REVISIONS

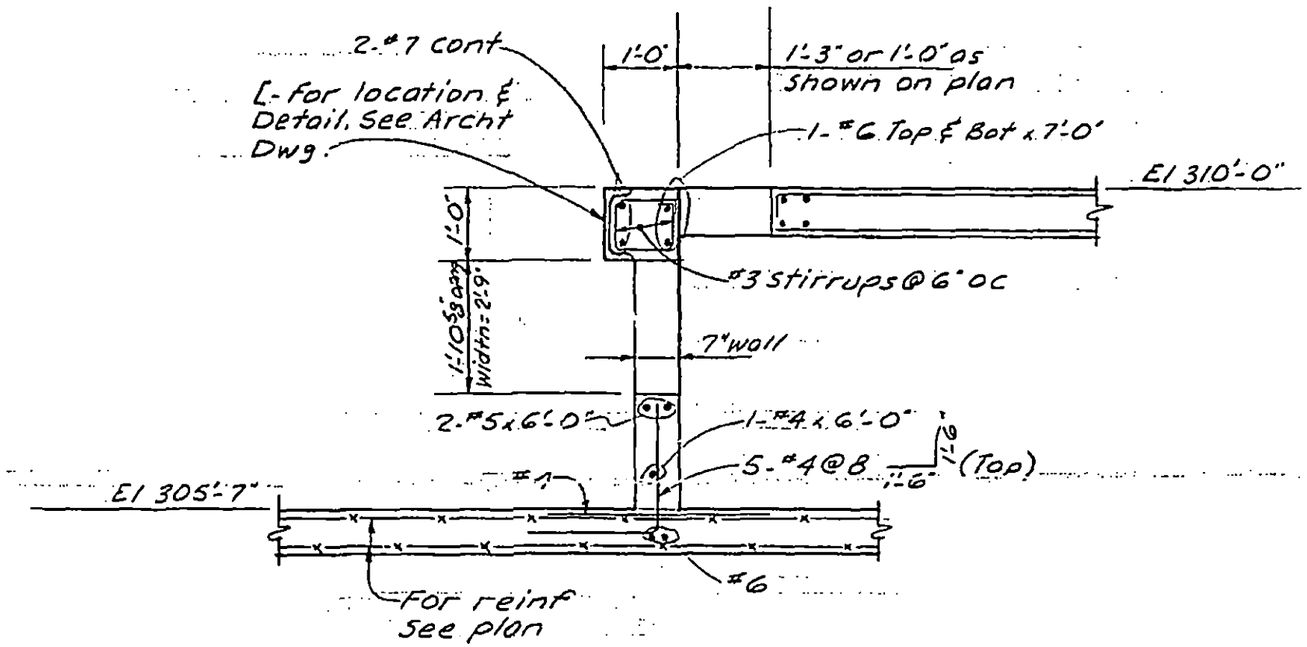

Section L-L

Note:
All reinforcing symm about ℄ of opening.

DESIGNED

DRAWN A.F.

REVIEWED E.L.

6-JK8-41.10

SKILLING, HELLE, CHRISTIANSEN, ROBERTSON — Structural & Civil Engineers

PROJECT THE WORLD TRADE CENTER | TITLE SECTIONS AT EL 310'-0" | DATE 5-12-69

REVISIONS

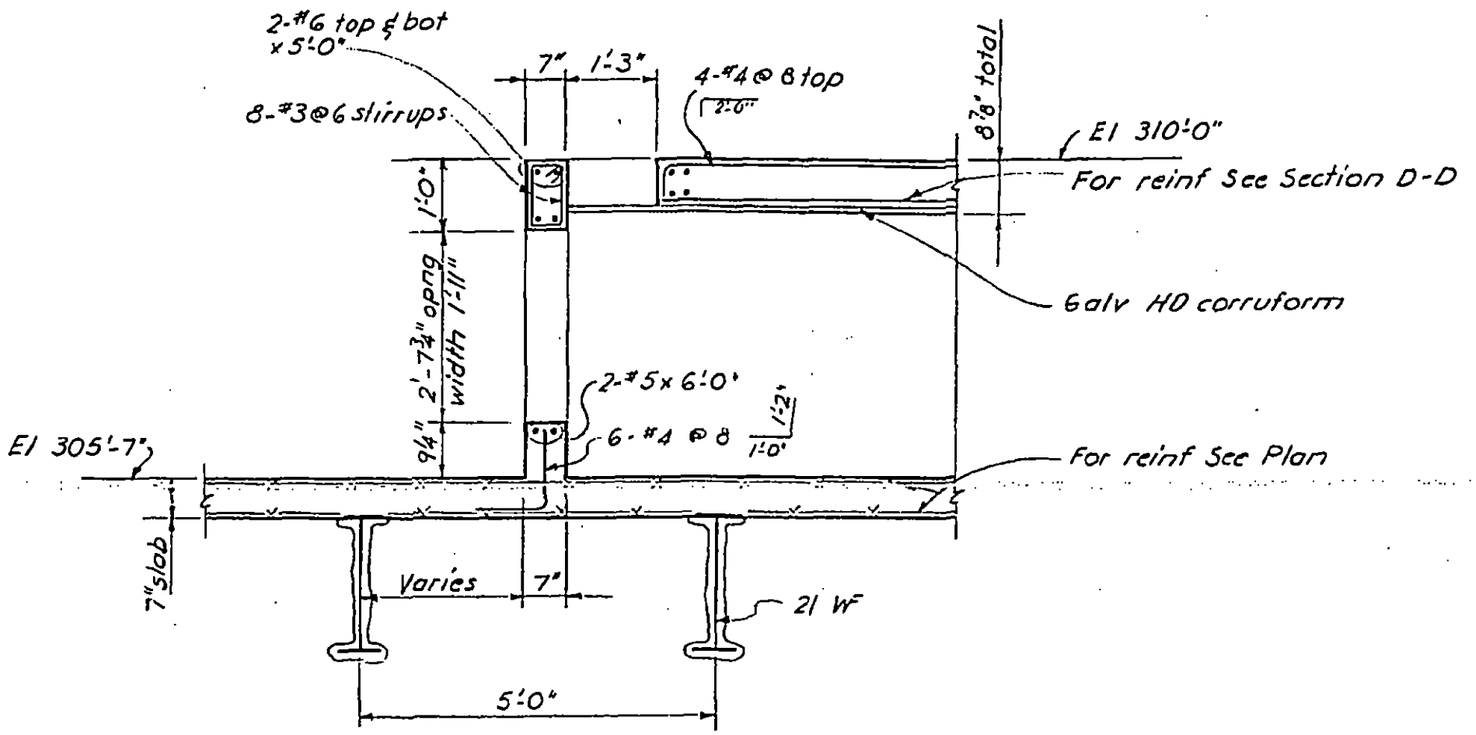

Section M-M

LICENSED PROFESSIONAL ENGINEER — LESLIE E. ROBERTSON — No. 34360 — UNIVERSITY OF THE STATE OF NEW YORK

DESIGNED

DRAWN F. Smith

REVIEWED E-1

S-1KA-21.11

SKILLING, HELLE, CHRISTIANSEN, ROBERTSON — Structural & Civil Engineers

PROJECT: THE WORLD TRADE CENTER | TITLE: SECTION AT EL. 310'-0" | DATE: 5-12-69

REVISIONS

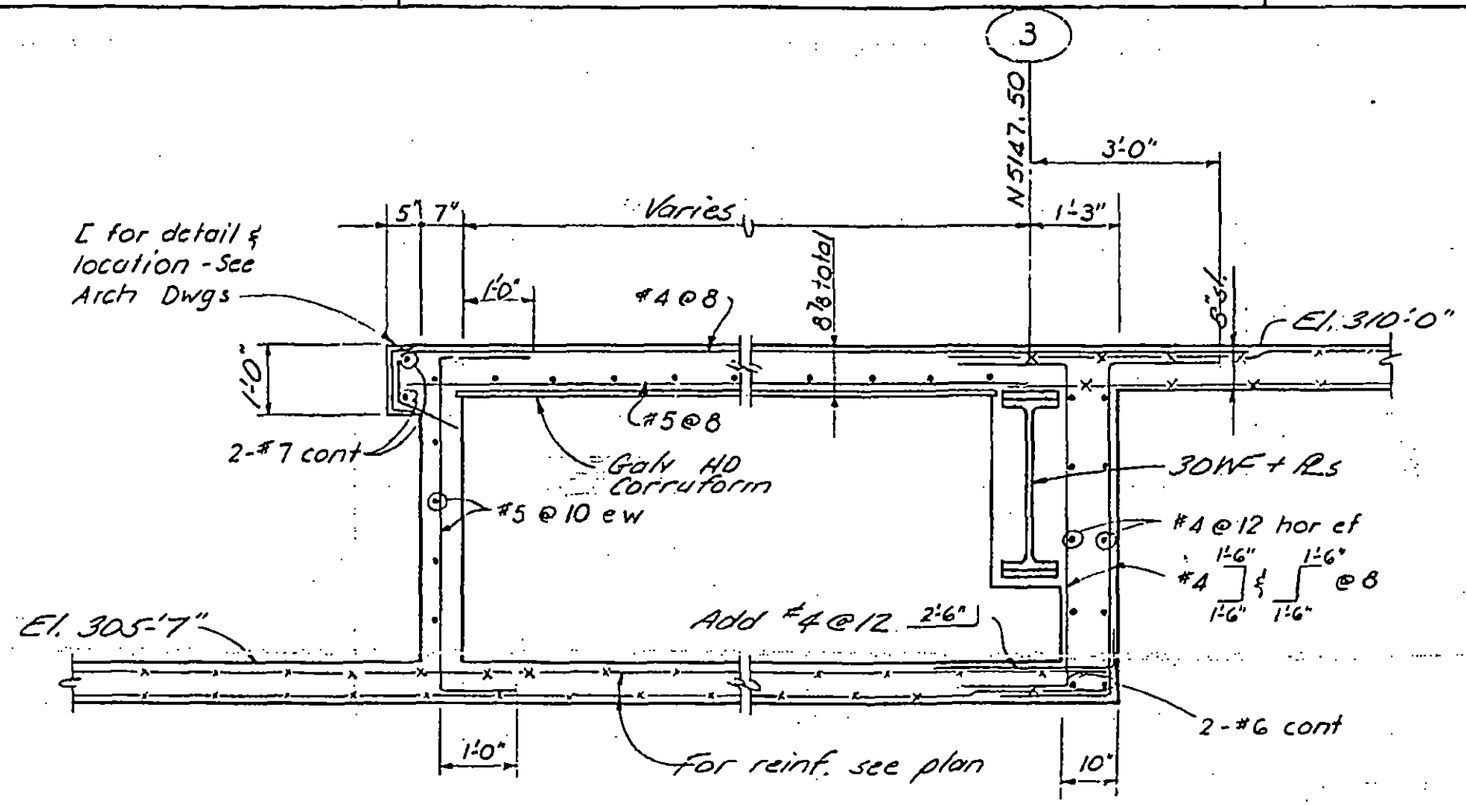

Section N-N

LICENSED PROFESSIONAL ENGINEER
LESLIE E. ROBERTSON
No. 34360
UNIVERSITY OF THE STATE OF NEW YORK

DESIGNED

DRAWN: S.C.

REVIEWED: E.L.

8-JKB-41.12

SKILLING, HELLE, CHRISTIANSEN, ROBERTSON — Structural & Civil Engineers

PROJECT: THE WORLD TRADE CENTER | TITLE: SECTIONS AT ELEVATION 310'-0" | DATE: 5-12-69

REVISIONS

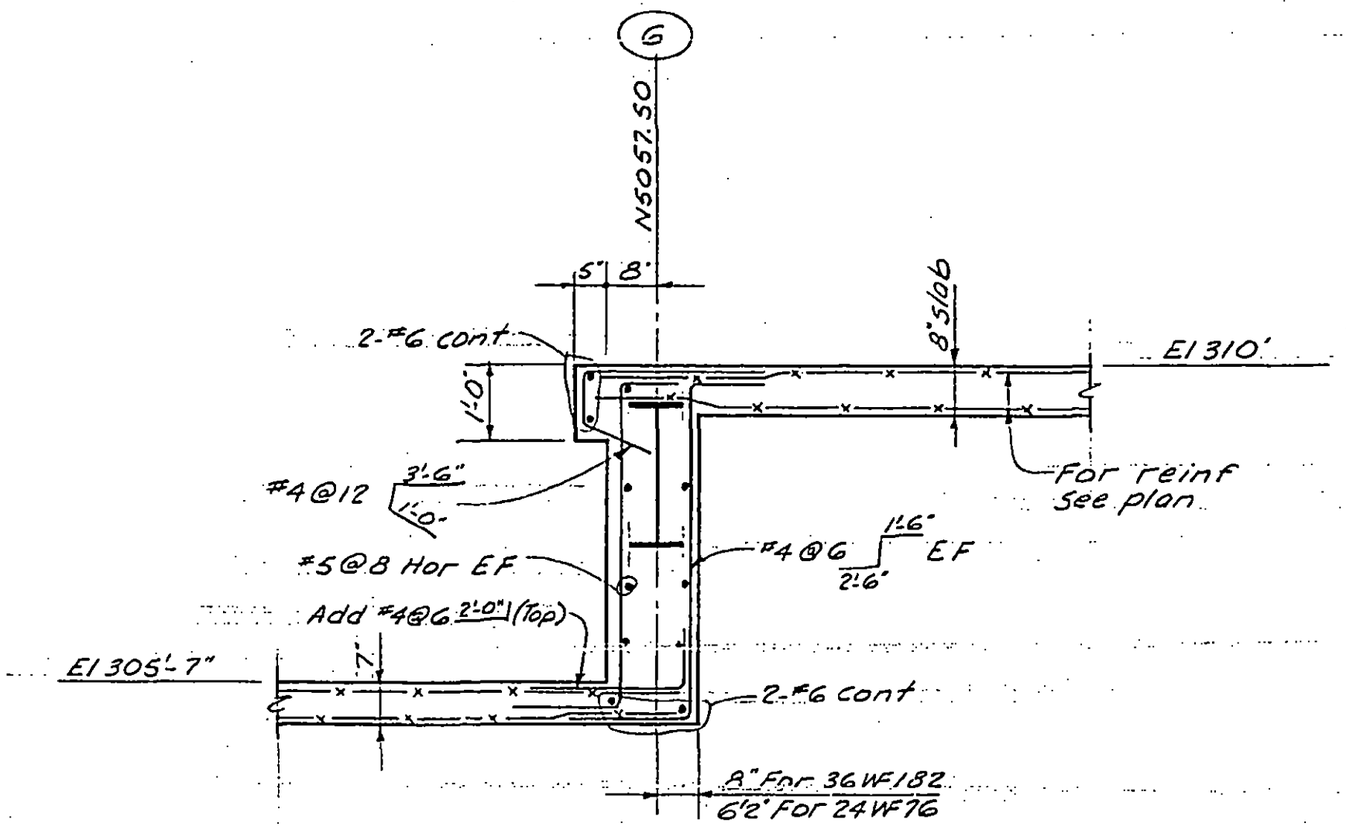

Section P-P

LICENSED PROFESSIONAL ENGINEER
LESLIE E. ROBERTSON
No. 34360
UNIVERSITY OF THE STATE OF NEW YORK

DESIGNED

DRAWN A.F.

REVIEWED E.L.

8-JK8-41.13

SKILLING, HELLE, CHRISTIANSEN, ROBERTSON — Structural & Civil Engineers

PROJECT: THE WORLD TRADE CENTER | TITLE: SECTIONS AT EL. 310'-0" | DATE: 12-18-68

REVISIONS

1-17-69

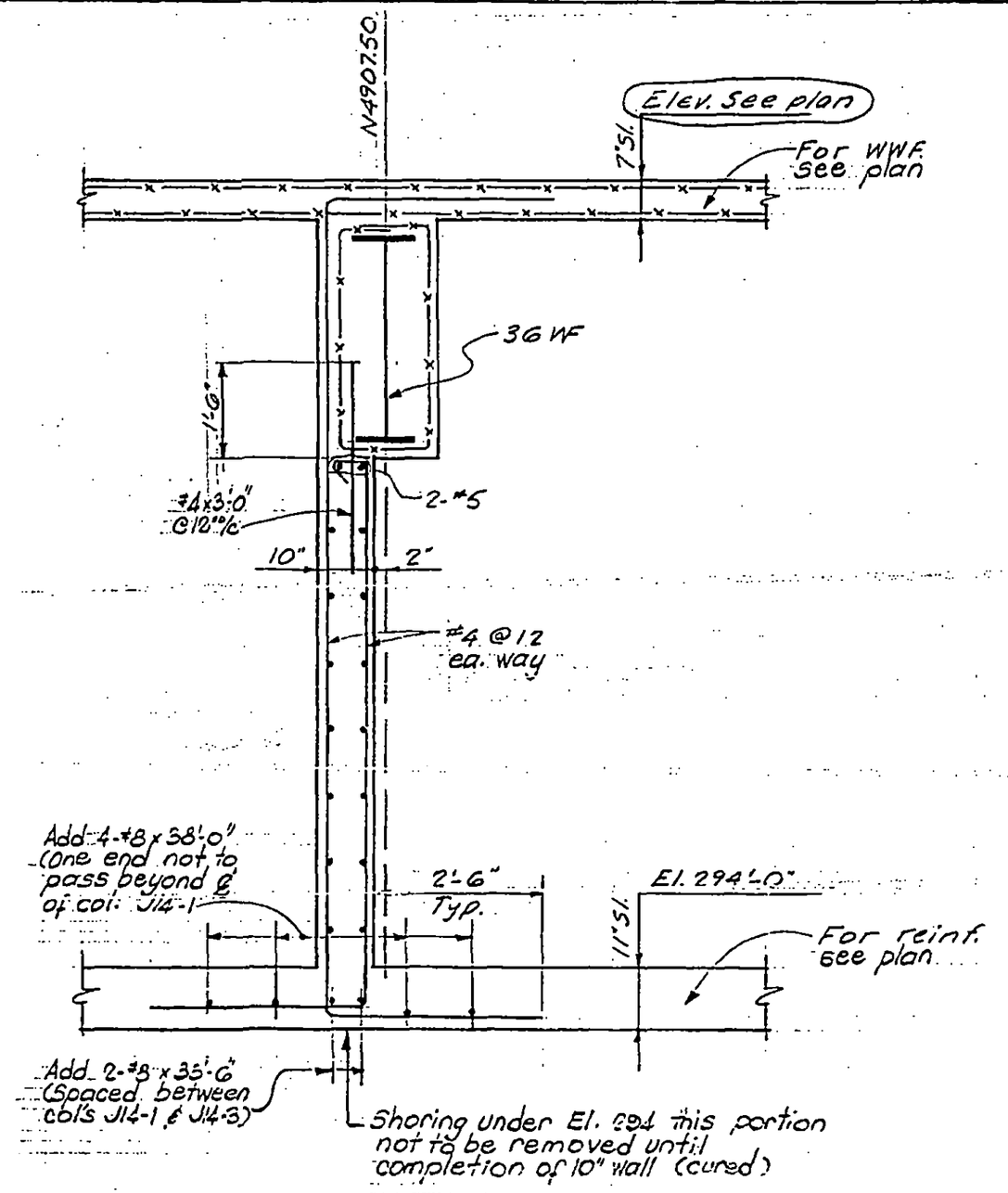

Section Q-Q
(For extent see plan)

LICENSED PROFESSIONAL ENGINEER — LESLIE E. ROBERTSON — No. 34360 — UNIVERSITY OF THE STATE OF NEW YORK

DESIGNED

DRAWN: S.C.

REVIEWED: J.M. & E.L.

SKILLING, HELLE, CHRISTIANSEN, ROBERTSON — Structural & Civil Engineers

PROJECT: THE WORLD TRADE CENTER | TITLE: SECTIONS AT EL. 310 | DATE: 1-31-69

REVISIONS

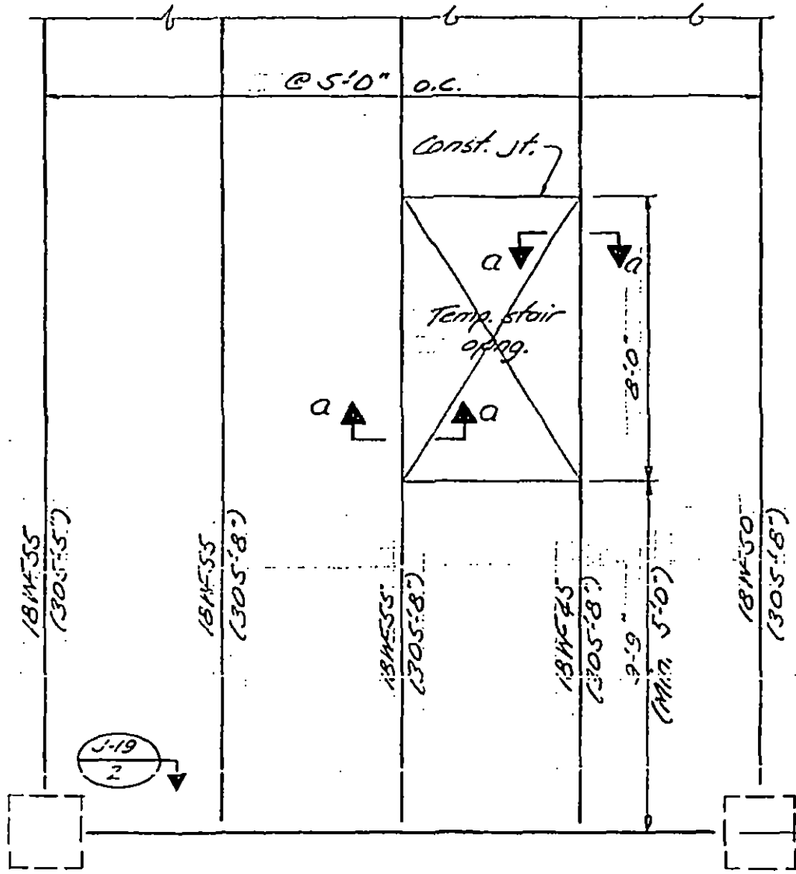

PART PLAN AT STREET LEVEL
(¼"=1'-0")

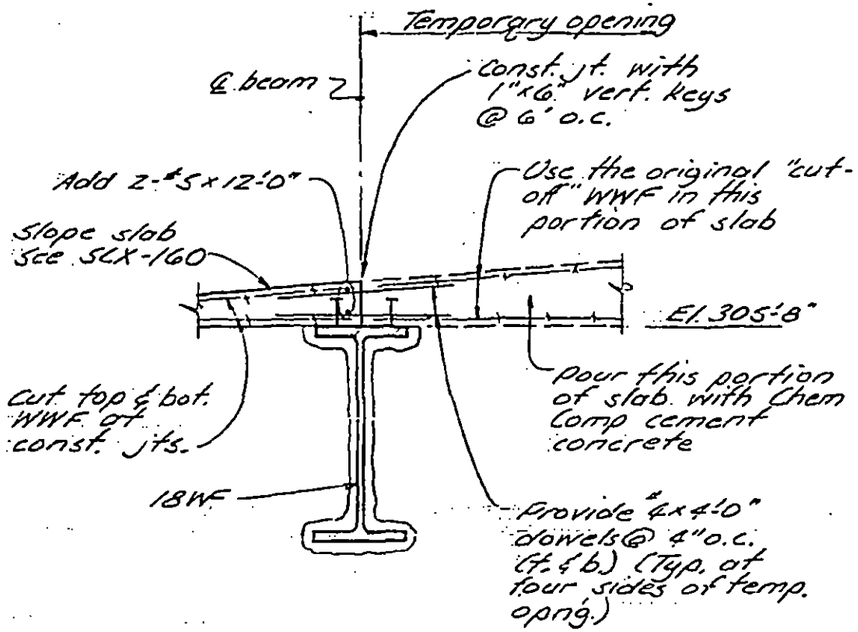

Section a-a

LICENSED PROFESSIONAL ENGINEER
LESLIE E. ROBERTSON
No. 34360
UNIVERSITY OF THE STATE OF NEW YORK

DESIGNED

DRAWN J. Adams

REVIEWED E.L.

8-JX0-47.13

SKILLING, HELLE, CHRISTIANSEN, ROBERTSON — Structural & Civil Engineers

PROJECT THE WORLD TRADE CENTER | TITLE SECTIONS AT ELEVATION 310'-0" | DATE 5-12-69

REVISIONS

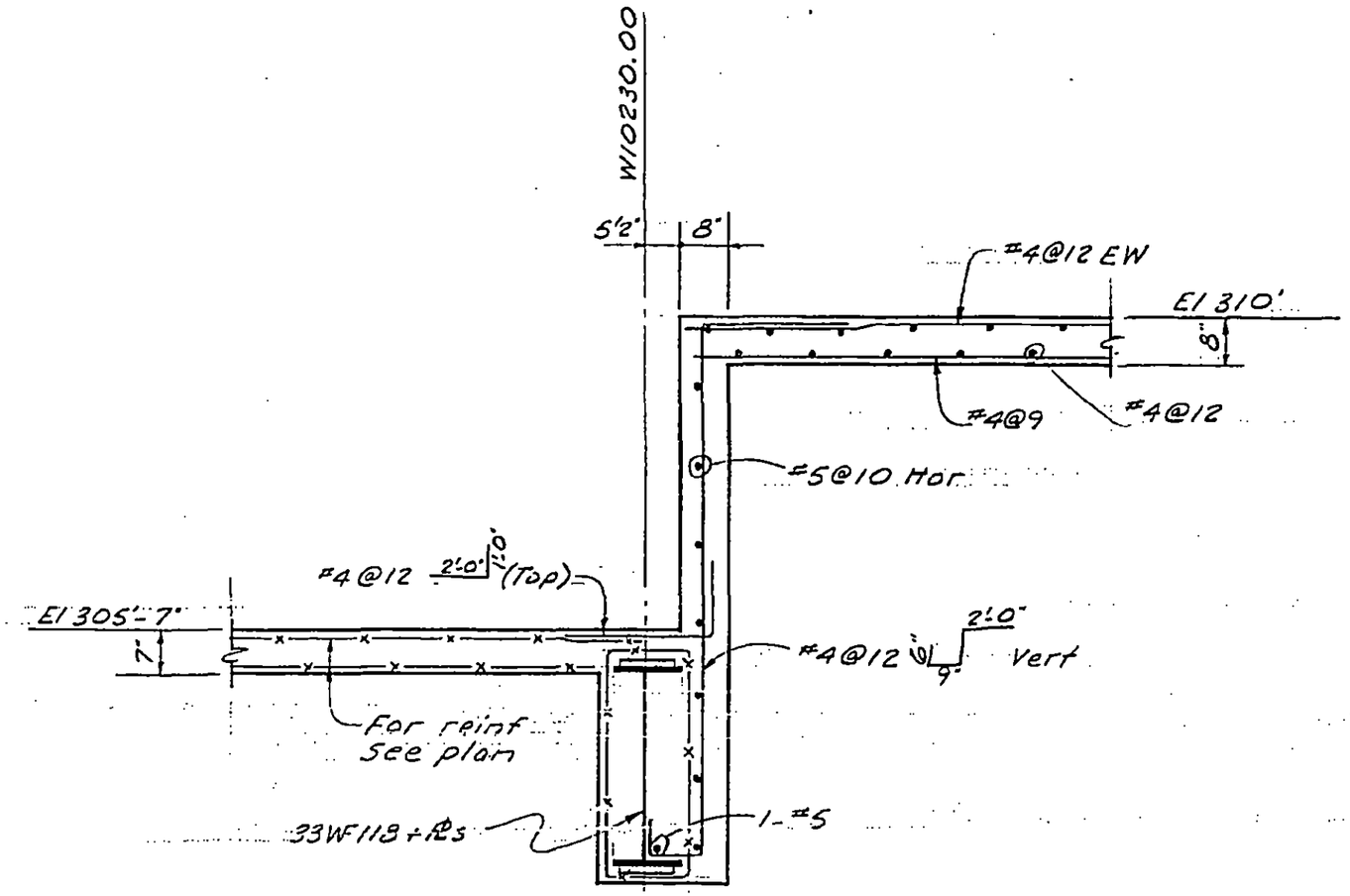

Section R-R

LICENSED PROFESSIONAL ENGINEER
LESLIE E. ROBERTSON
No. 34360
UNIVERSITY OF THE STATE OF NEW YORK

DESIGNED

DRAWN A.F.

REVIEWED E.L.

SKILLING - HELLE - CHRISTIANSEN - ROBERTSON Structural & Civil Engineers

PROJECT THE WORLD TRADE CENTER | TITLE SECTIONS AT EL. 310'-0" | DATE 8-25-69

REVISIONS

10-29-71

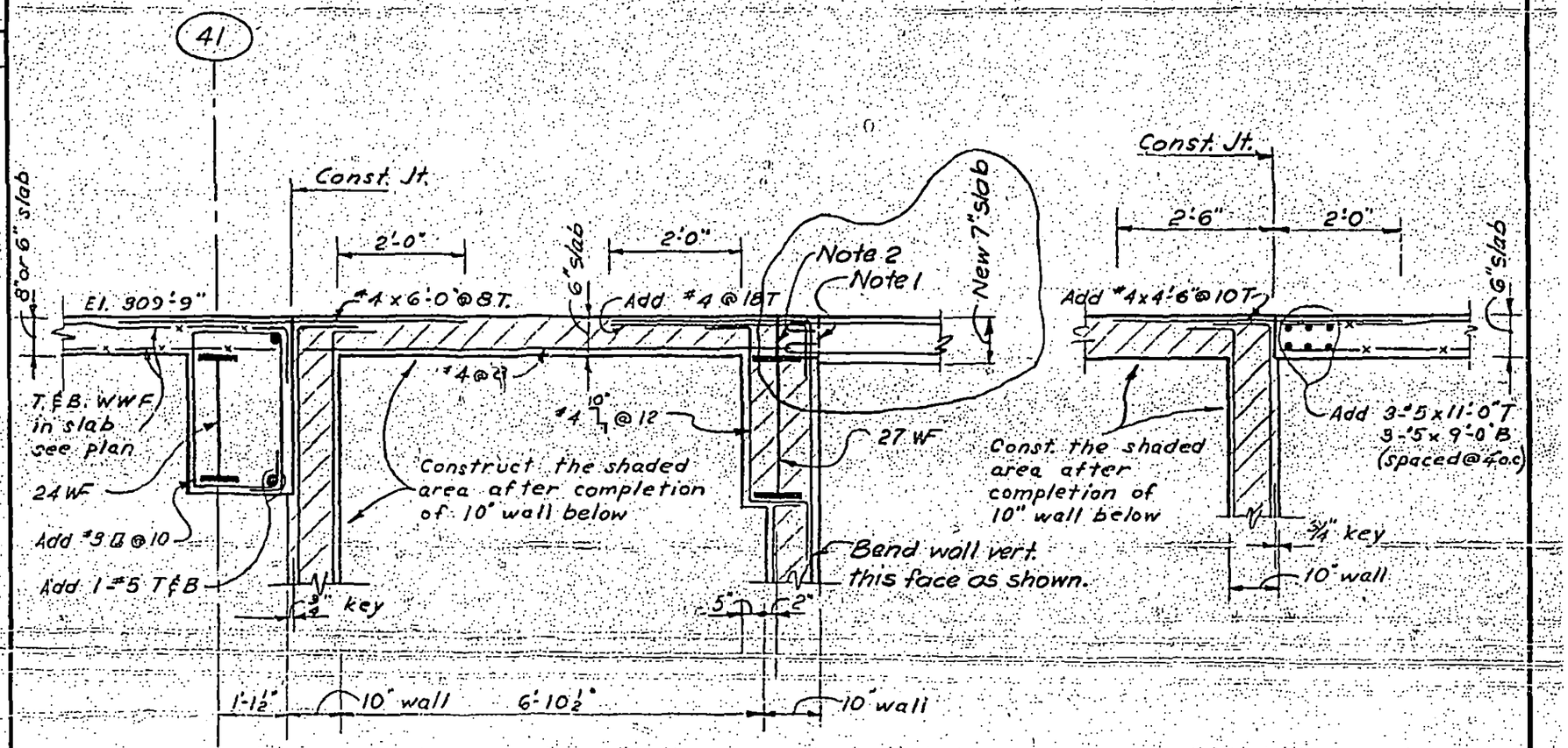

Section 3-3
(½"=1'-0")

Section 1-1
(½"=1'-0")

Notes:
1. Remove existing concrete without damaging exist. reinforcing.
2. Coat entire surface of exist. concrete with approved, epoxy bonding compound prior to casting new slab.

LICENSED PROFESSIONAL ENGINEER
LESLIE E. ROBERTSON
No. 34360
UNIVERSITY OF THE STATE OF NEW YORK

DRAWN
J.H.
REVIEWED

8-JK8-41.17

SKILLING, HELLE, CHRISTIANSEN, ROBERTSON — Structural & Civil Engineers

PROJECT THE WORLD TRADE CENTER | TITLE SECTIONS AT EL 310'-0" | DATE 9-12-69

REVISIONS

6-15-73

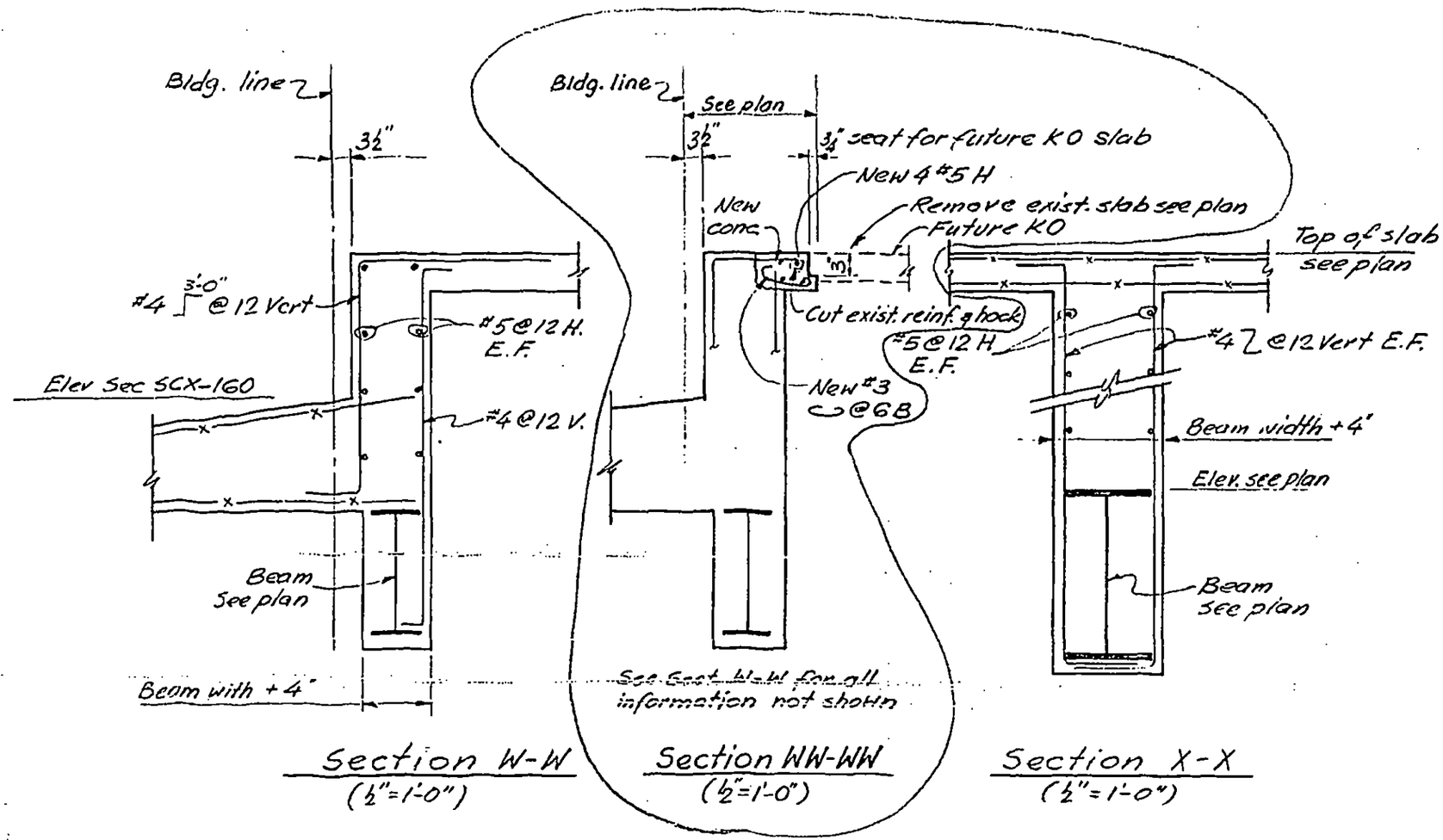

Section W-W (½"=1'-0")

Section WW-WW (½"=1'-0")

Section X-X (½"=1'-0")

LICENSED PROFESSIONAL ENGINEER LESLIE E. ROBERTSON No. 34360 UNIVERSITY OF THE STATE OF NEW YORK

DESIGNED

DRAWN J. Griciurs

REVIEWED E.L.

8-JK8-41.19

SKILLING, HELLE, CHRISTIANSEN, ROBERTSON — Structural & Civil Engineers

PROJECT THE WORLD TRADE CENTER | TITLE SECTION AT EL 310'-0" | DATE 9-12-69

REVISIONS

6-15-73

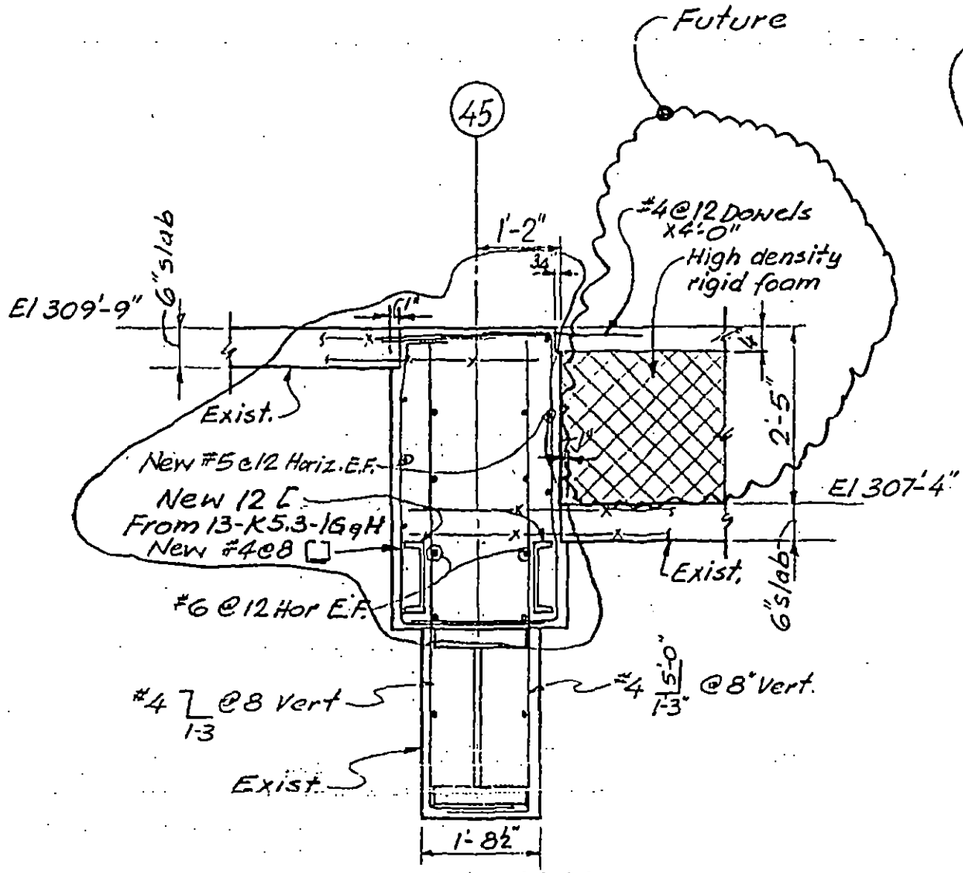

Section Y-Y

Section YY-YY

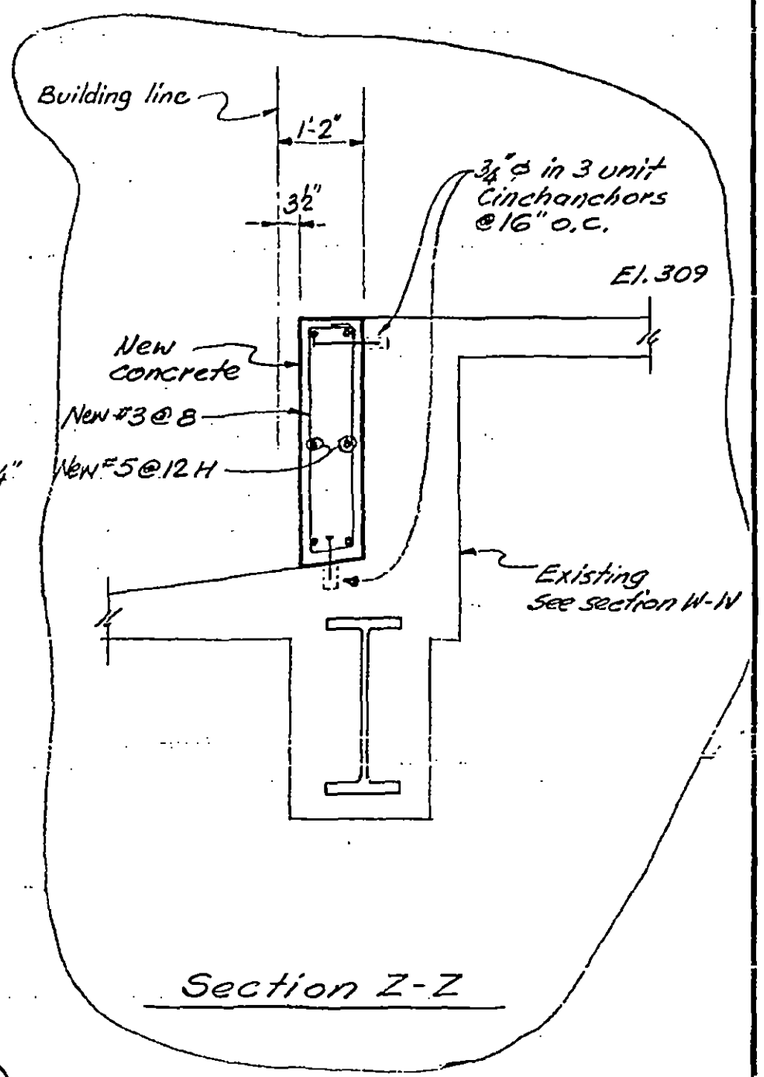

Section Z-Z

LICENSED PROFESSIONAL ENGINEER — LESLIE E. ROBERTSON — No. 34360 — UNIVERSITY OF THE STATE OF NEW YORK

DESIGNED

DRAWN J. Gricius

REVIEWED E.L.

8-JK8-41.20

SKILLING - HELLE - CHRISTIANSEN - ROBERTSON Structural & Civil Engineers

PROJECT THE WORLD TRADE CENTER | TITLE SECTIONS AT EL. 310'-0" | DATE 8-25-69

REVISIONS

10-29-71

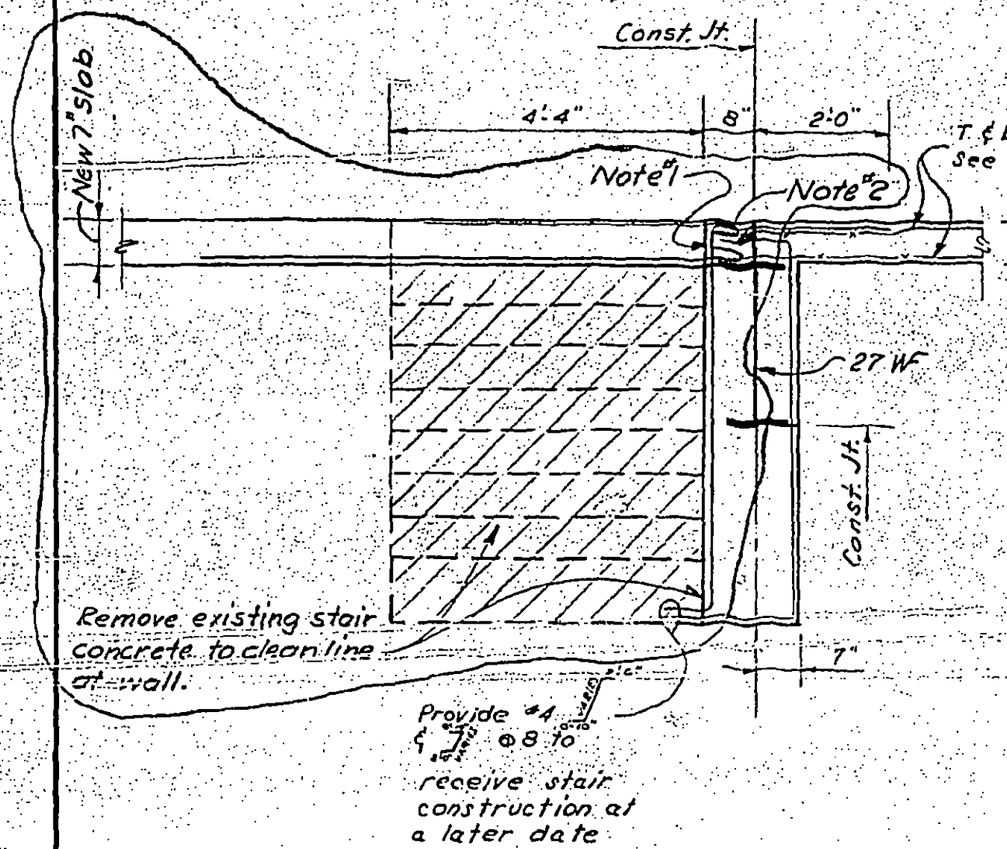

Section U-U
(½"-1'-0")

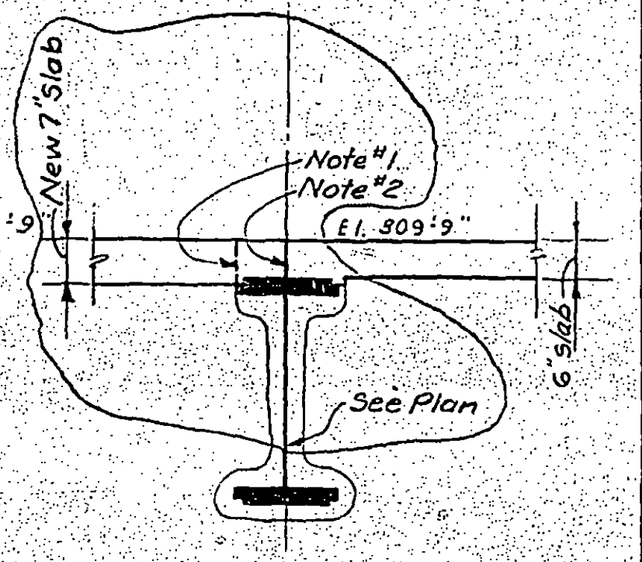

Section V-V
(½"=1'-0")

See 8-JK8-41.17 for notes 1 & 2.

LICENSED PROFESSIONAL ENGINEER
LESLIE E. ROBERTSON
No. 34360
UNIVERSITY OF THE STATE OF NEW YORK

DRAWN J.H.

REVIEWED E.L.

8-JK8-41.18

SKILLING, HELLE, CHRISTIANSEN, ROBERTSON — Structural & Civil Engineers

PROJECT: THE WORLD TRADE CENTER | TITLE: CONCRETE BEAM SECTIONS | DATE: 12-18-68

REVISIONS

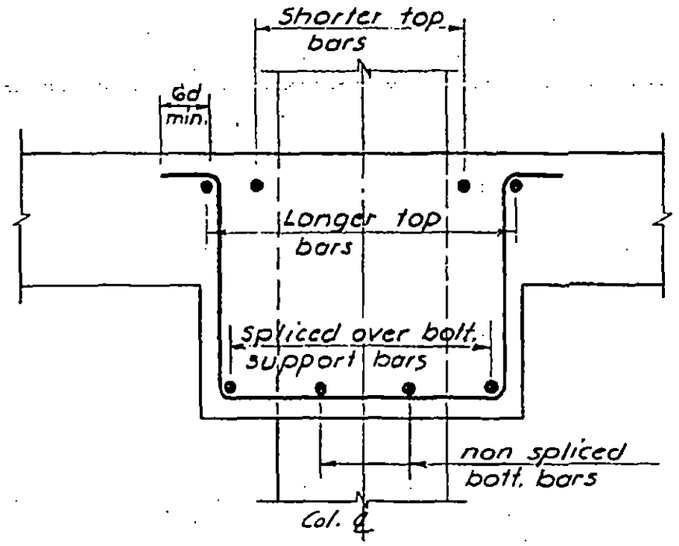

Typical Section A-A

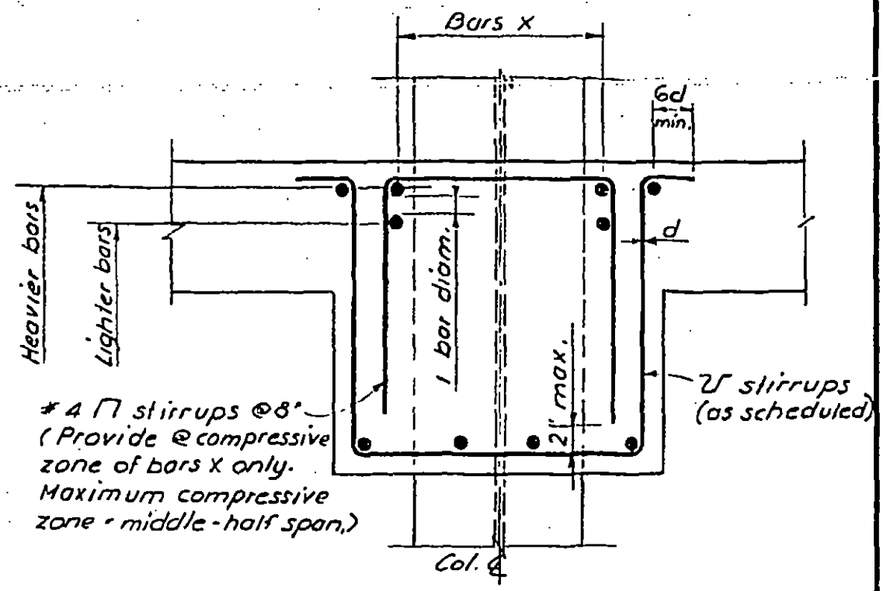

Section B-B
(4 bars "X" in compressive zone)

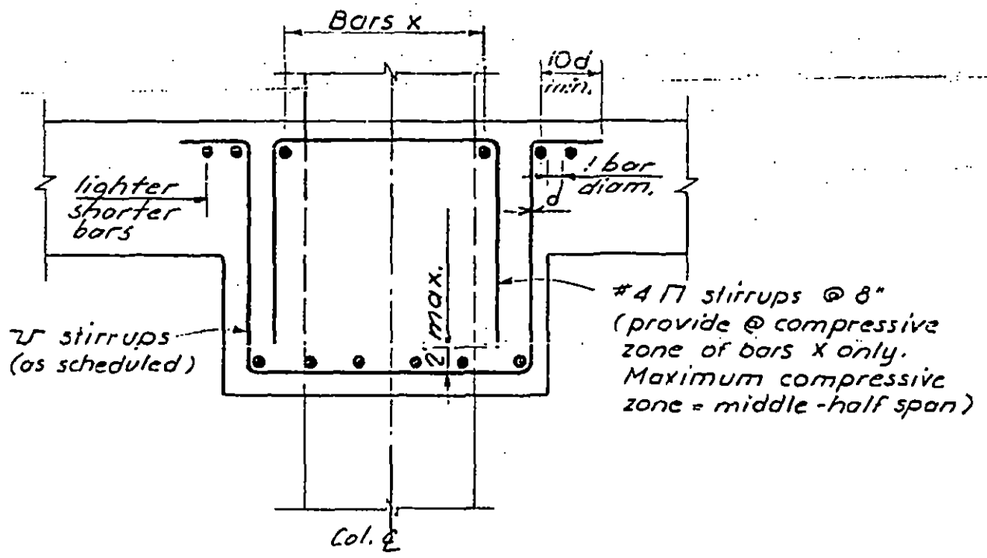

Section C-C
(2 bars "X" in compressive zone)

LICENSED PROFESSIONAL ENGINEER — LESLIE E. ROBERTSON — No. 34360 — UNIVERSITY OF THE STATE OF NEW YORK

DESIGNED

DRAWN: S.C.

REVIEWED: J.M. & E.L.

8-JK8-42

SKILLING, HELLE, CHRISTIANSEN, ROBERTSON — Structural & Civil Engineers

PROJECT: THE WORLD TRADE CENTER | TITLE: BEAM REINFORCEMENT & CONST. JOINT DETAIL | DATE: 12-18-68

REVISIONS

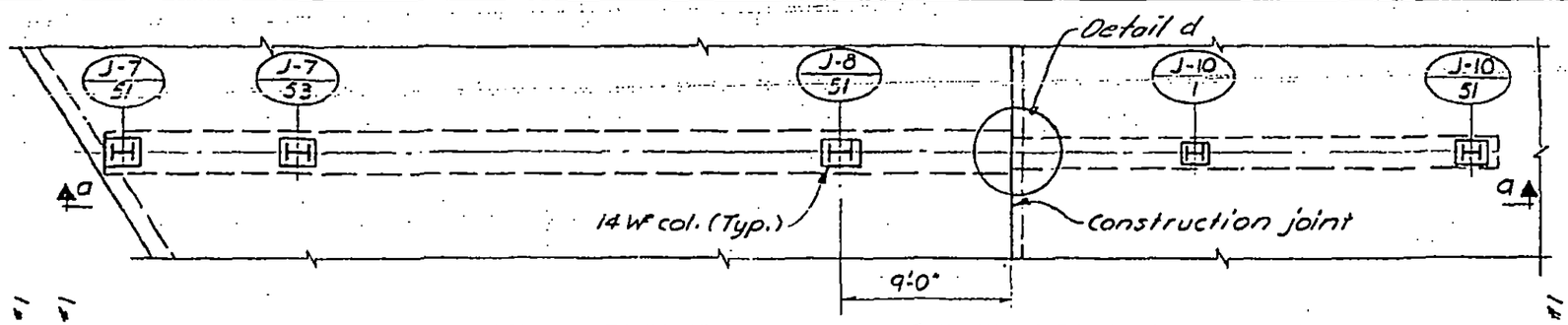

Part Plan Zone J-3 El. 253'-0"

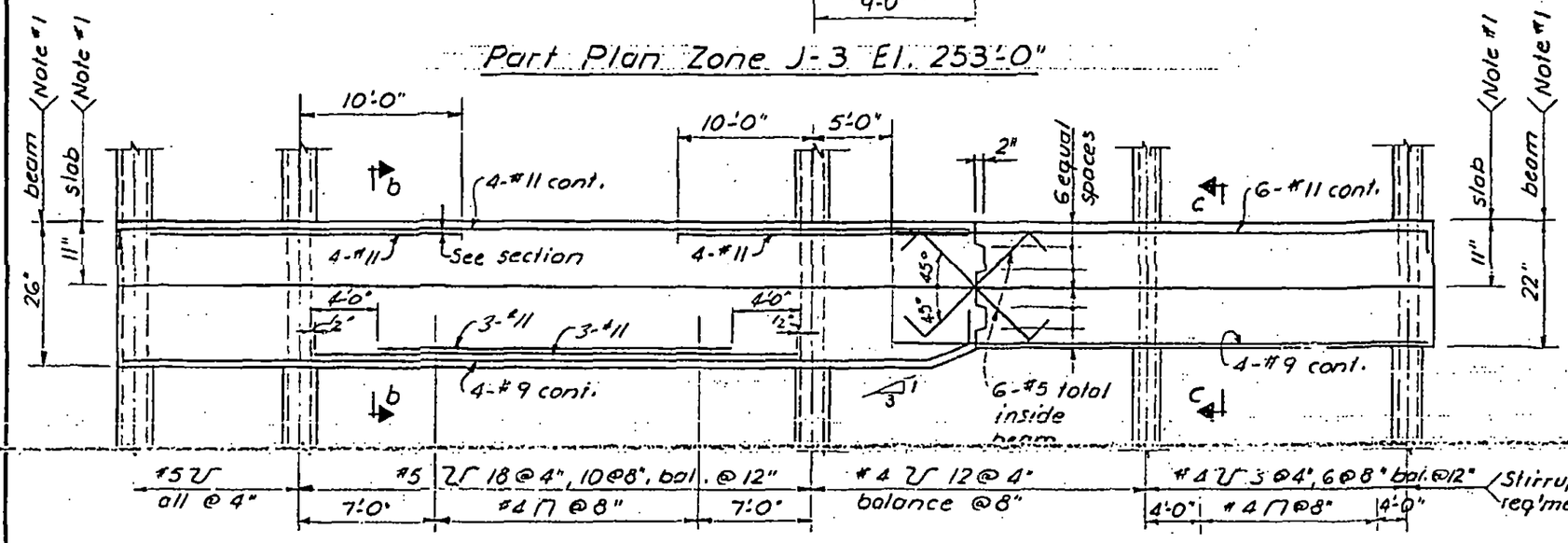

Section a-a

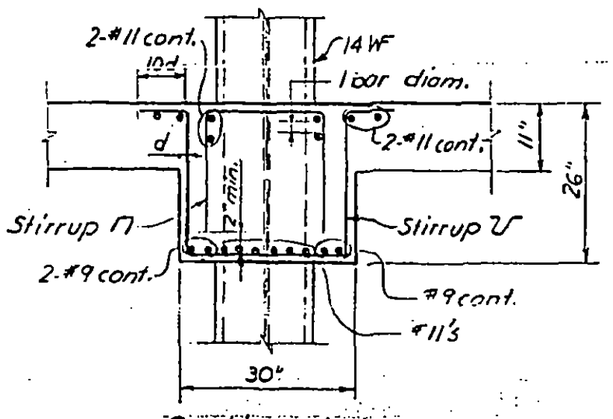

Section b-b

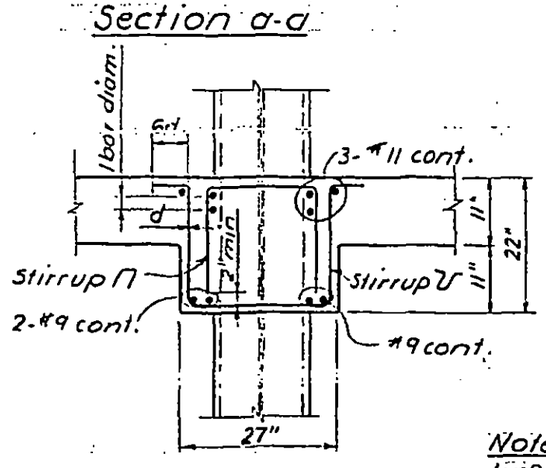

Section c-c

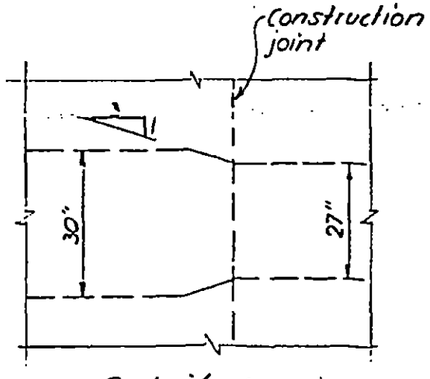

Detail d

Notes:
1. Depth is exaggerated

LICENSED PROFESSIONAL ENGINEER — LESLIE E. ROBERTSON — No. 34360 — UNIVERSITY OF THE STATE OF NEW YORK

DESIGNED

DRAWN: S.C.

REVIEWED: J.M. & E.L.

8-JK8-43

SKILLING, HELLE, CHRISTIANSEN, ROBERTSON — Structural & Civil Engineers

PROJECT: THE WORLD TRADE CENTER | TITLE: CATCH BASIN NO. 1 | DATE: 12-9-68

REVISIONS

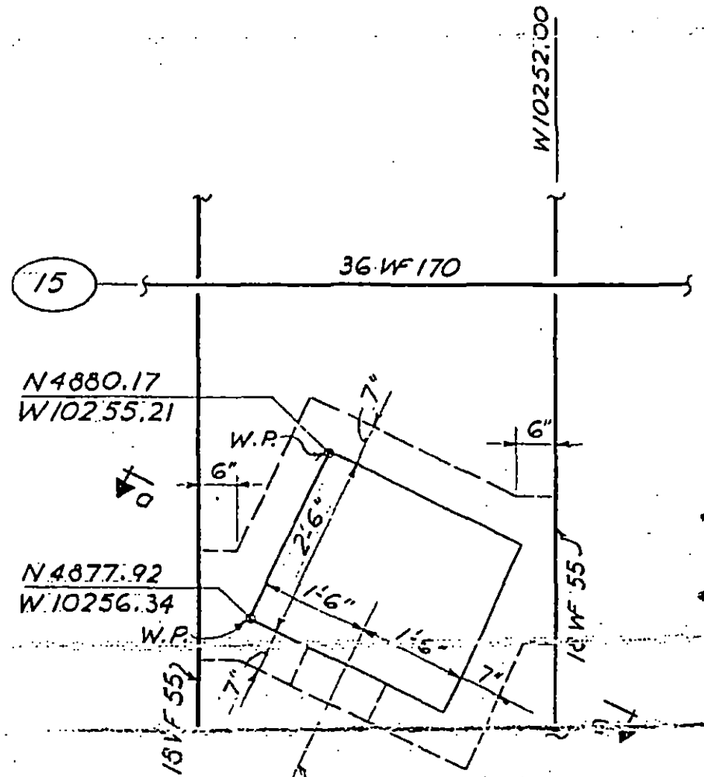

Provide 14"ϕ pipe sleeve, Inv. of sleeve at El. 303'-11" (See mech. dwg. for exact detail)

Plan
(½" - 1'-0")

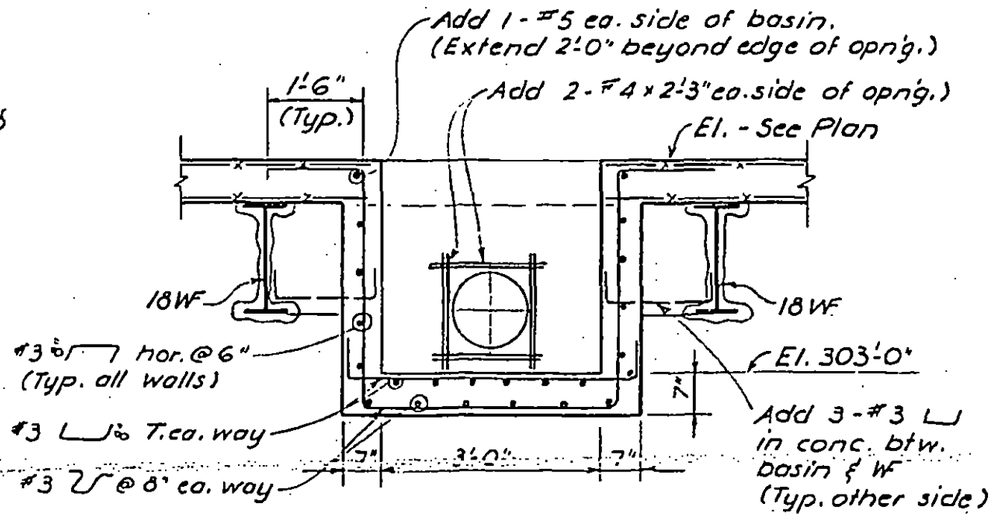

Section a-a
(½" - 1'-0")

LICENSED PROFESSIONAL ENGINEER
LESLIE E. ROBERTSON
No. 34360
UNIVERSITY OF THE STATE OF NEW YORK

DESIGNED

DRAWN

REVIEWED

8-JK8-44

SKILLING, HELLE, CHRISTIANSEN, ROBERTSON — Structural & Civil Engineers

PROJECT: THE WORLD TRADE CENTER | TITLE: CATCH BASIN No. 2 | DATE: 12-9-68

REVISIONS

1-27-69

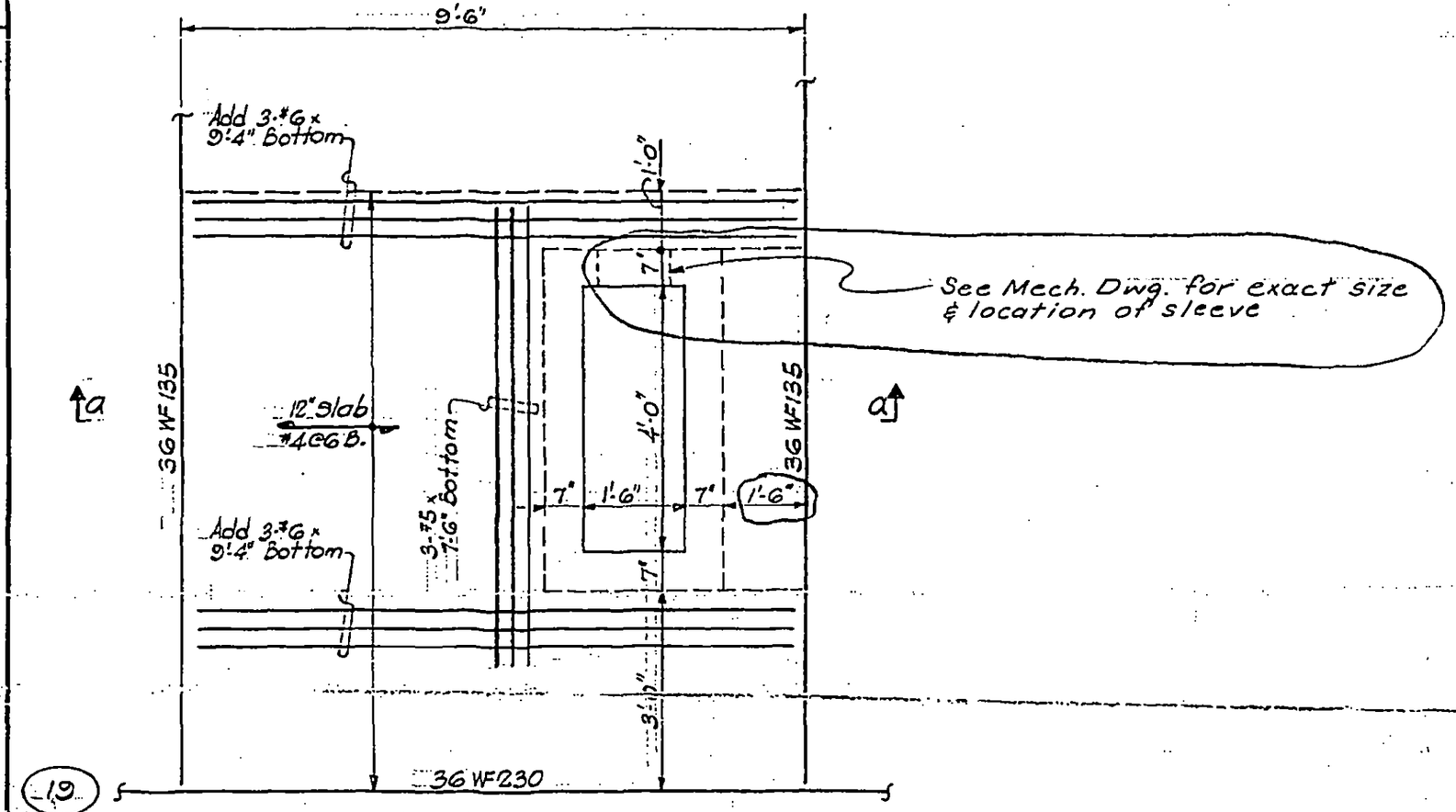

19

PLAN

(½" = 1'-0")

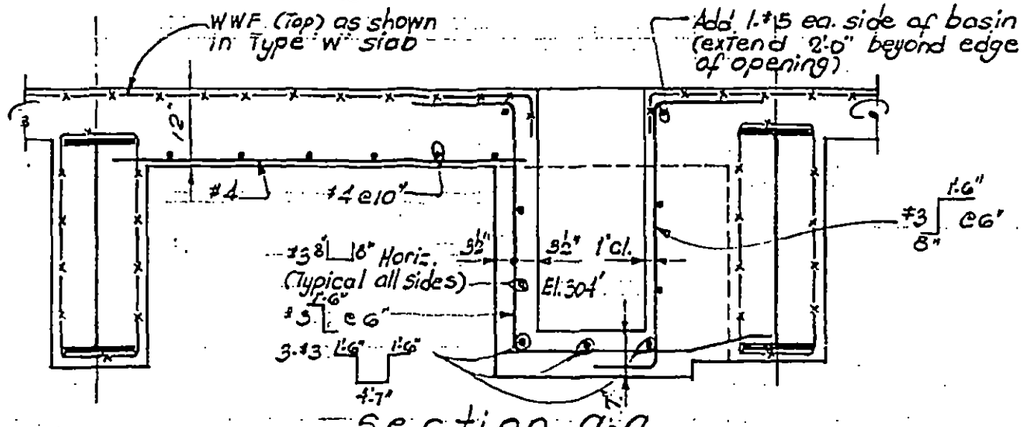

Section a-a

(½" = 1'-0")

LICENSED PROFESSIONAL ENGINEER — LESLIE E. ROBERTSON — No. 34360 — UNIVERSITY OF THE STATE OF NEW YORK

DESIGNED

DRAWN: S.C.

REVIEWED: E.L.

8-JK8-45

SKILLING, HELLE, CHRISTIANSEN, ROBERTSON — Structural & Civil Engineers

PROJECT THE WORLD TRADE CENTER | TITLE CATCH BASIN No. 3 | DATE 7-6-70

REVISIONS

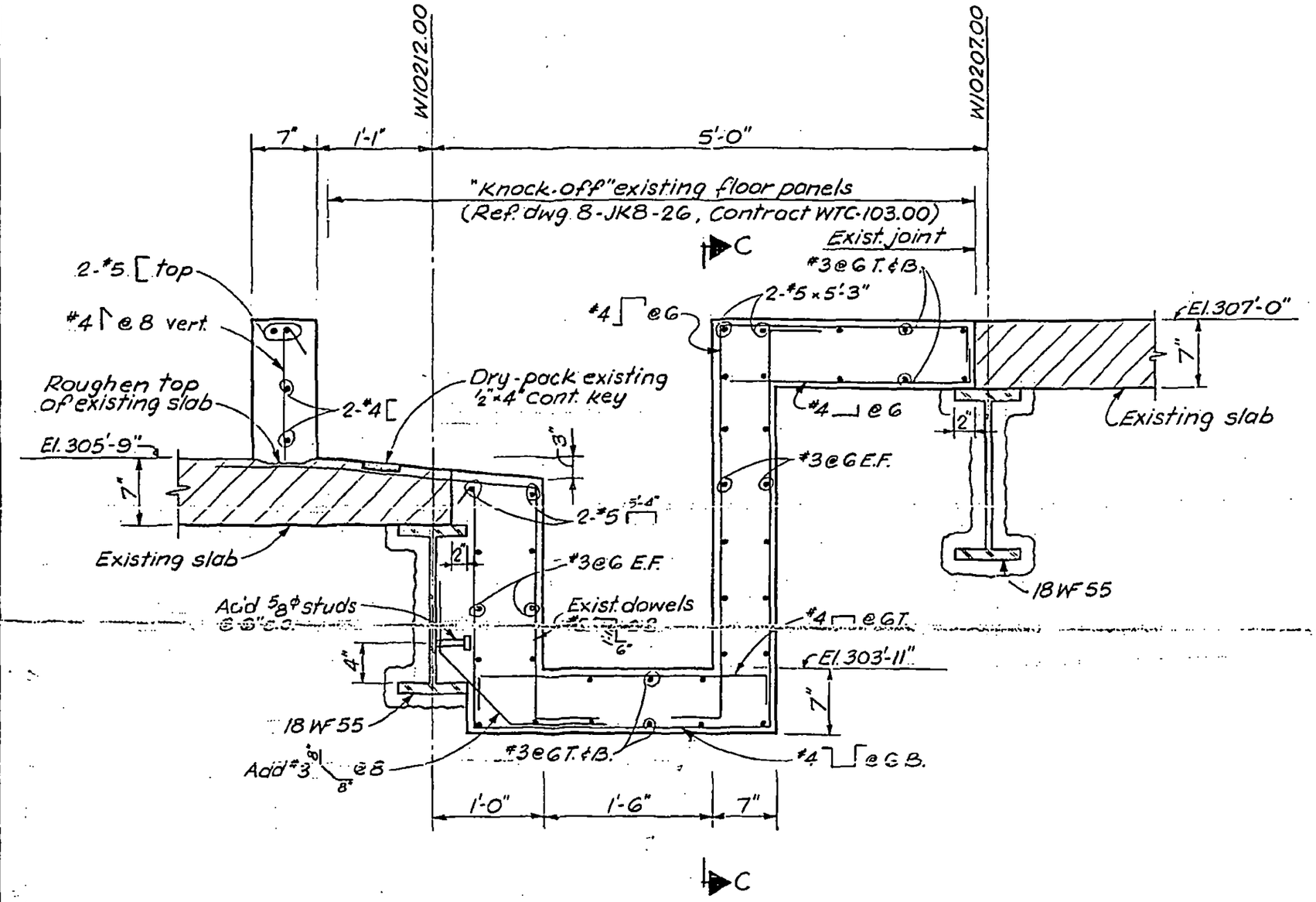

Section A-A
(1" = 1'-0")

DESIGNED

DRAWN
S.C.

REVIEWED
E.L.

8-JK8-45.1

SKILLING, HELLE, CHRISTIANSEN, ROBERTSON — Structural & Civil Engineers

PROJECT THE WORLD TRADE CENTER | TITLE CATCH BASIN No. 3 | DATE 7-6-70

REVISIONS

7-13-70

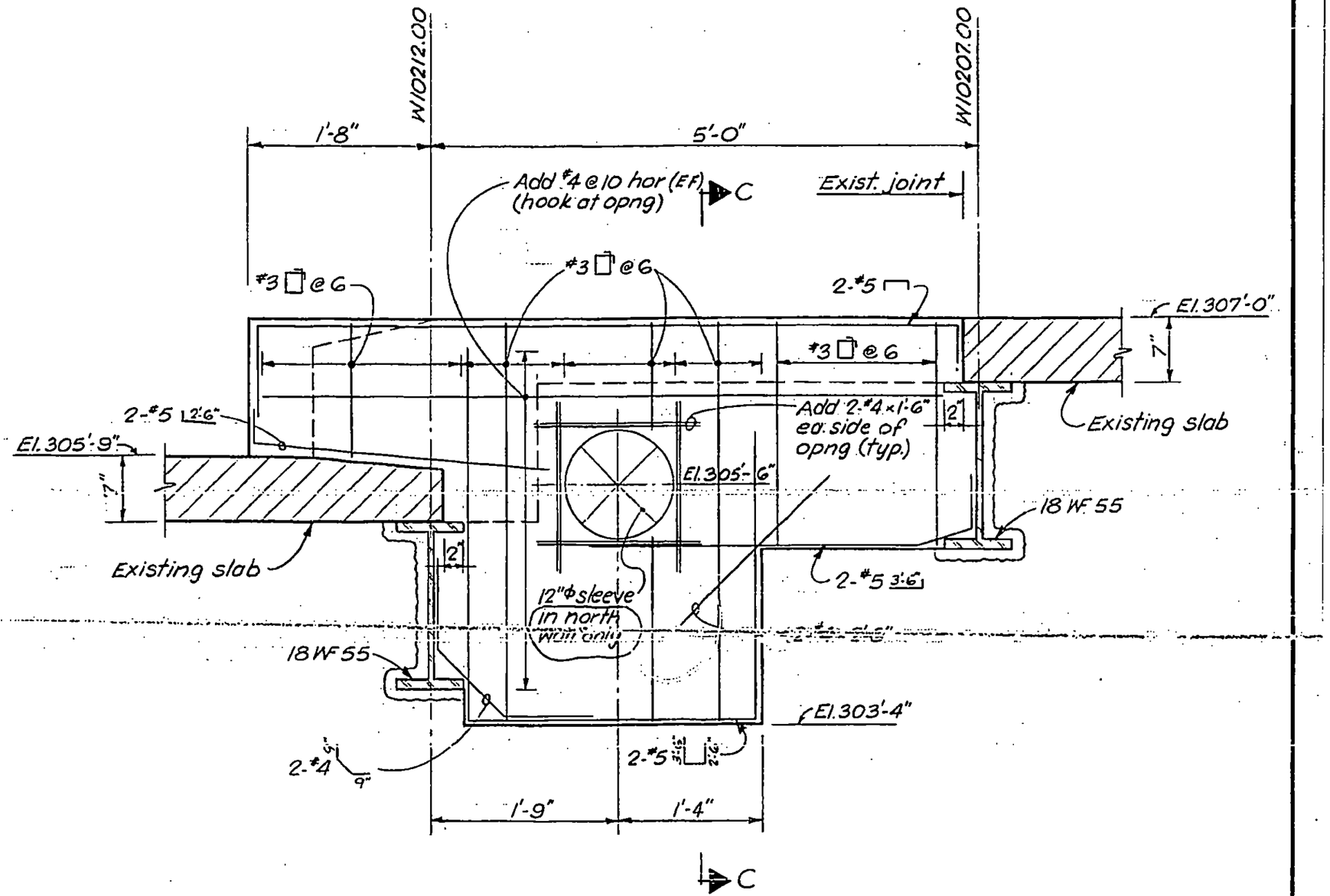

Section B-B

(1"=1'-0")

LICENSED PROFESSIONAL ENGINEER — LESLIE E. ROBERTSON — No. 34360 — UNIVERSITY OF THE STATE OF NEW YORK

DESIGNED

DRAWN S.C.

REVIEWED E.L.

8-JK8-45.2

SKILLING, HELLE, CHRISTIANSEN, ROBERTSON — Structural & Civil Engineers

PROJECT THE WORLD TRADE CENTER | TITLE CATCH BASIN No. 3 | DATE 7-6-70

REVISIONS

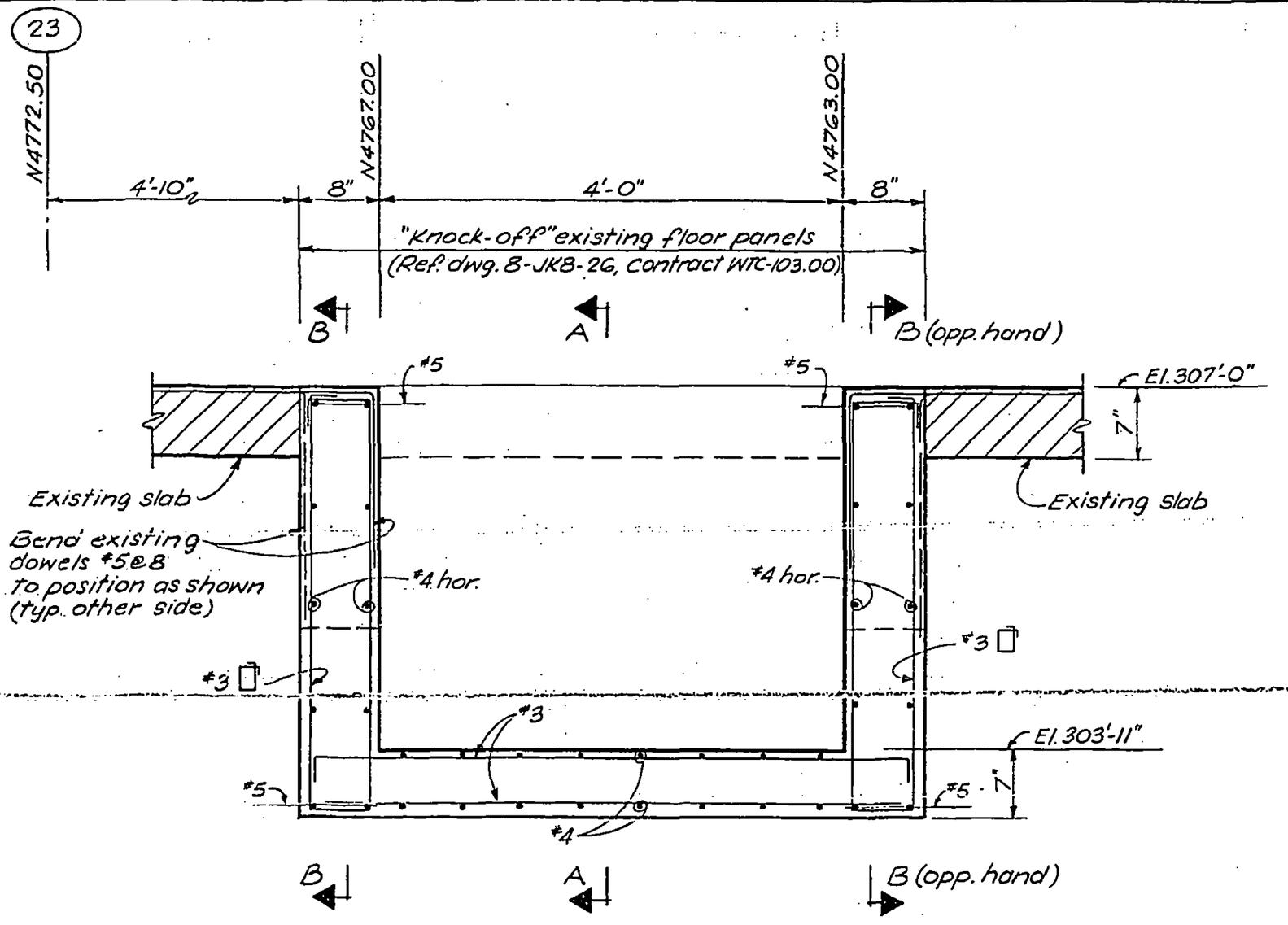

Section C-C

(1" = 1'-0")

LICENSED PROFESSIONAL ENGINEER
LESLIE E. ROBERTSON
No. 34360
UNIVERSITY OF THE STATE OF NEW YORK

DESIGNED

DRAWN S.C.

REVIEWED E.L.

8-JK8-45.3

SKILLING, HELLE, CHRISTIANSEN, ROBERTSON — Structural & Civil Engineers

PROJECT THE WORLD TRADE CENTER | TITLE SECTIONS AT EL. 294'-0" | DATE 12-18-68

REVISIONS

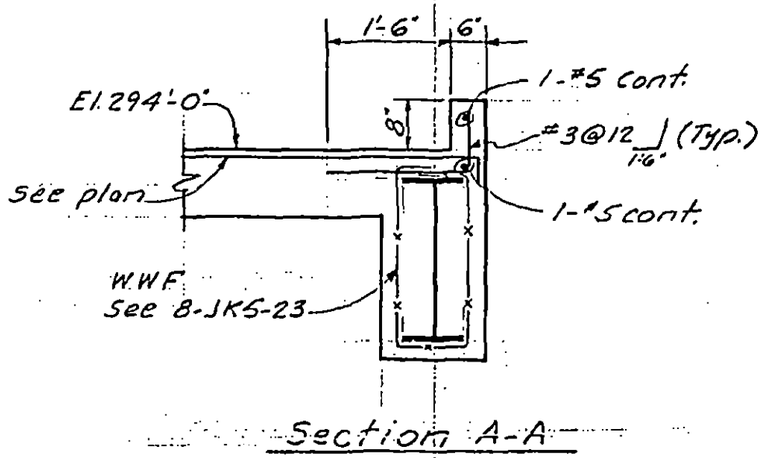

Section A-A

LICENSED PROFESSIONAL ENGINEER
LESLIE E. ROBERTSON
No. 34360
UNIVERSITY OF THE STATE OF NEW YORK

DESIGNED

DRAWN S.C.

REVIEWED J.M.& E.L.

8-JKB-46.1

SKILLING, HELLE, CHRISTIANSEN, ROBERTSON — Structural & Civil Engineers

PROJECT THE WORLD TRADE CENTER | TITLE SECTION AT EL. 294'-0" | DATE 2-20-69

REVISIONS

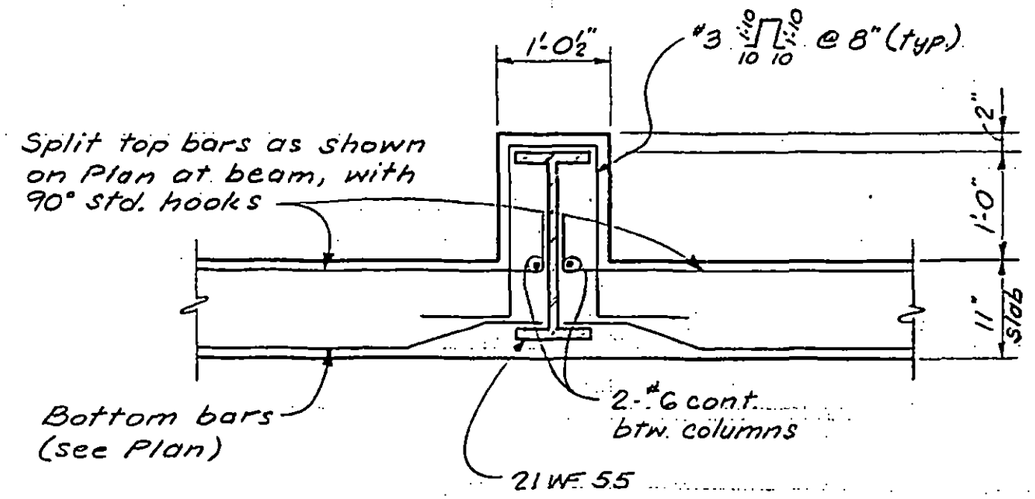

SECTION B-B

LICENSED PROFESSIONAL ENGINEER
LESLIE E. ROBERTSON
No. 34360
UNIVERSITY OF THE STATE OF NEW YORK

DESIGNED

DRAWN S.C.

REVIEWED E.L.

8.1K8-16.2

SKILLING, HELLE, CHRISTIANSEN, ROBERTSON — Structural & Civil Engineers

PROJECT THE WORLD TRADE CENTER | TITLE SECTION AT ELEV. 294' | DATE 4-2-69

REVISIONS

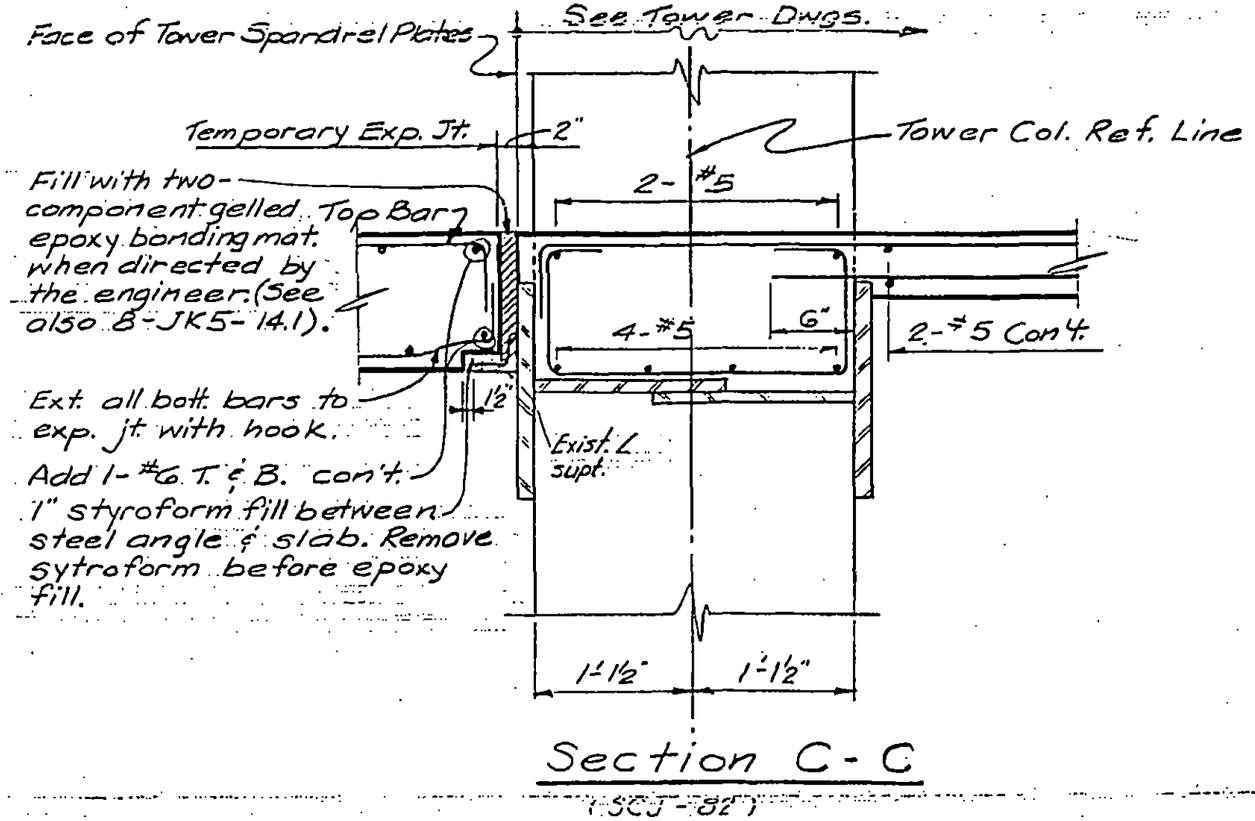

Section C-C

(SCJ-82)

Notes:

1) See also 8-JK5-14.1.

LICENSED PROFESSIONAL ENGINEER
LESLIE E. ROBERTSON
No. 34360
UNIVERSITY OF THE STATE OF NEW YORK

DESIGNED

DRAWN G.S.

REVIEWED E.L.

8-JK8-46.3

SKILLING, HELLE, CHRISTIANSEN, ROBERTSON — Structural & Civil Engineers

PROJECT THE WORLD TRADE CENTER | TITLE SECTION AT EL. 294'-0" | DATE 7-1-69

REVISIONS

7-23-69

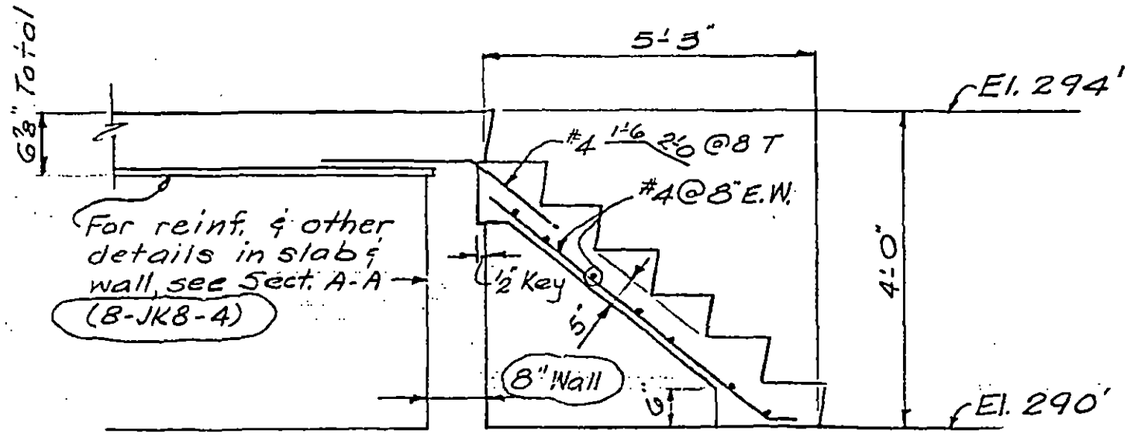

Section D-D
(½" = 1'-0")

LICENSED PROFESSIONAL ENGINEER
LESLIE E. ROBERTSON
No. 24960
UNIVERSITY OF THE STATE OF NEW YORK

DESIGNED

DRAWN G. Stanton

REVIEWED E.L.

8-JK8-46.4

SKILLING, HELLE, CHRISTIANSEN, ROBERTSON — Structural & Civil Engineers

PROJECT: THE WORLD TRADE CENTER | TITLE: SECTIONS AT EL. 294'-0" | DATE: 7-23-69

REVISIONS

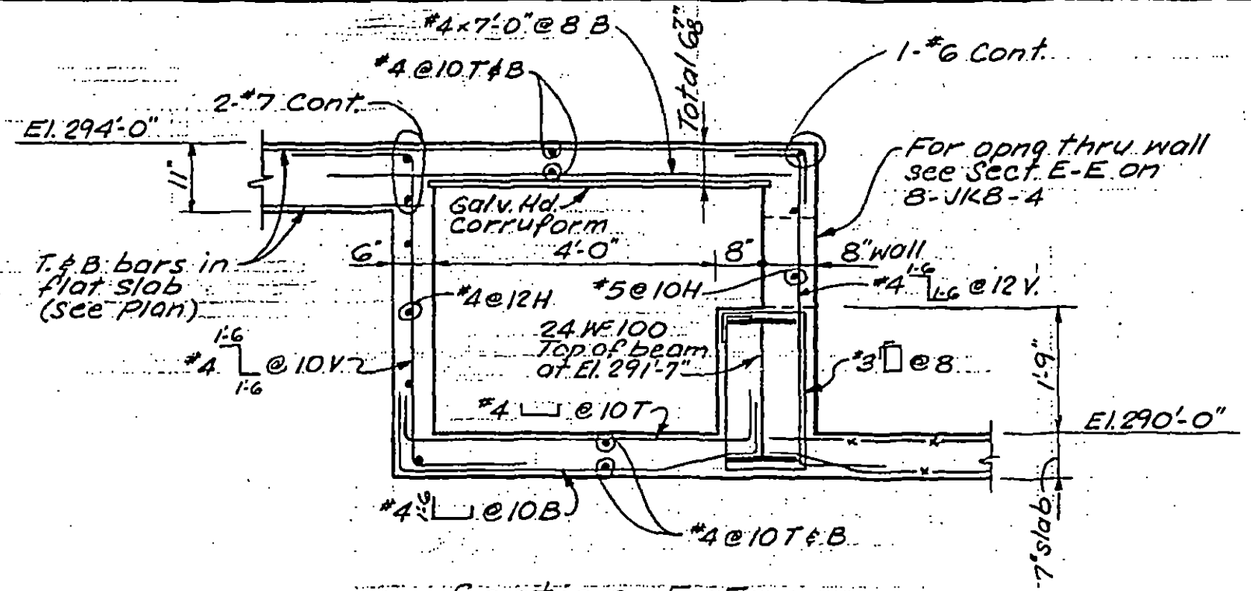

Section E-E

(½"=1'-0")

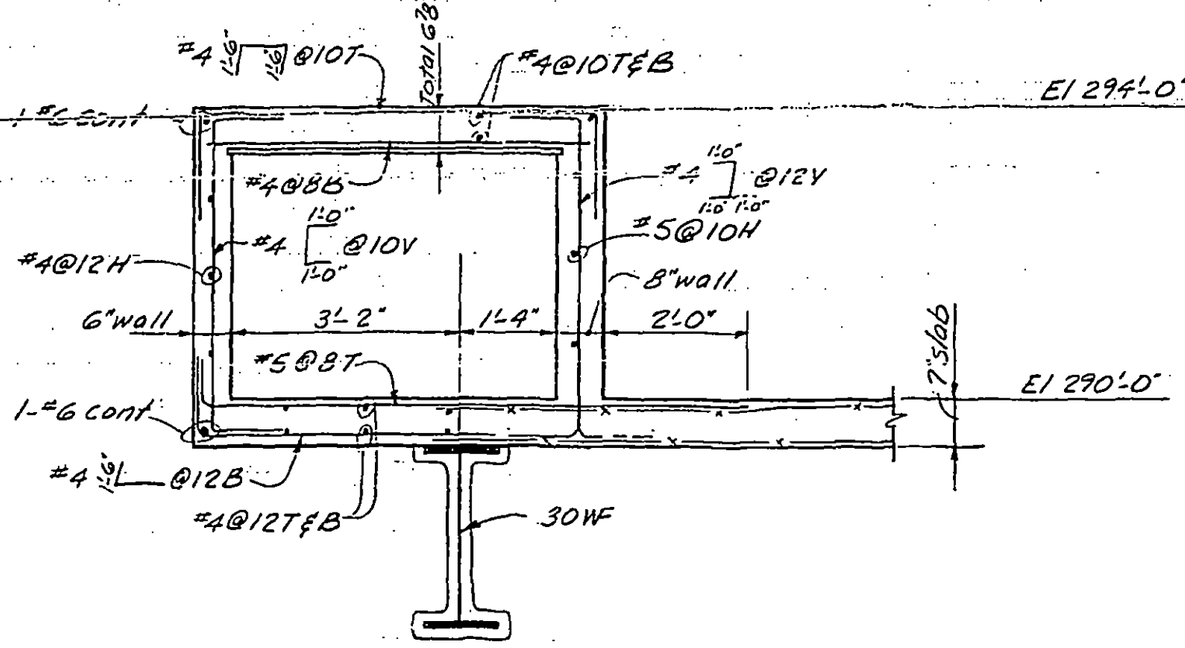

Section F-F

(½"=1'-0")

DESIGNED

DRAWN: S.C.

REVIEWED: E.L.

8-JK8-46.5

SKILLING, HELLE, CHRISTIANSEN, ROBERTSON — Structural & Civil Engineers

PROJECT: THE WORLD TRADE CENTER | TITLE: SECTION AT EL. 294' | DATE: 9-3-69

REVISIONS

2-27-70 GEN. REV.

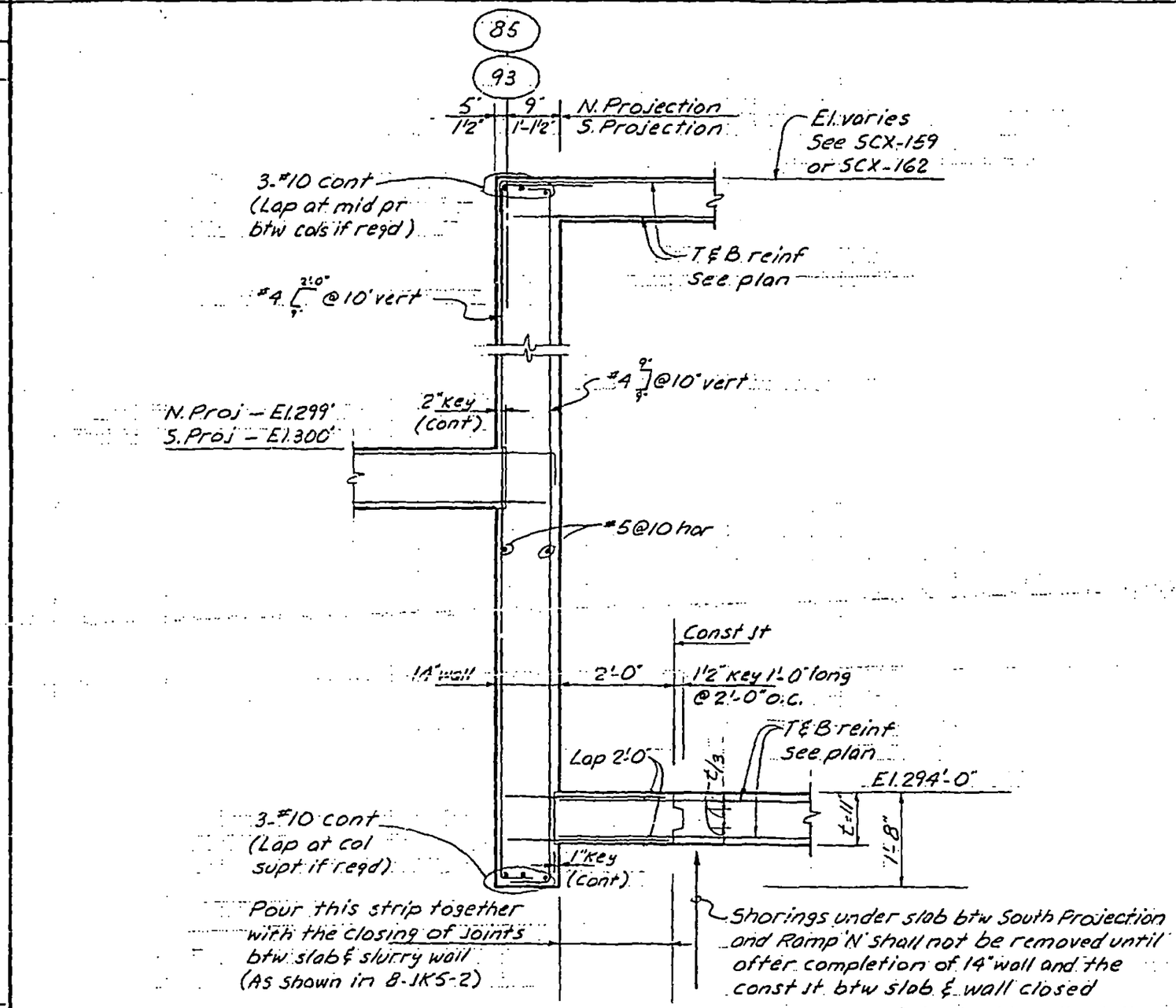

SECTION G-G

(1½"=1'-0")

LICENSED PROFESSIONAL ENGINEER — LESLIE E. ROBERTSON — No. 34360 — UNIVERSITY OF THE STATE OF NEW YORK

DESIGNED

DRAWN A.F.

REVIEWED E.L.

8-1K8-46.6

SKILLING, HELLE, CHRISTIANSEN, ROBERTSON — Structural & Civil Engineers

PROJECT: THE WORLD TRADE CENTER | TITLE: SECTION AT EL.294 | DATE: 9-3-69

REVISIONS

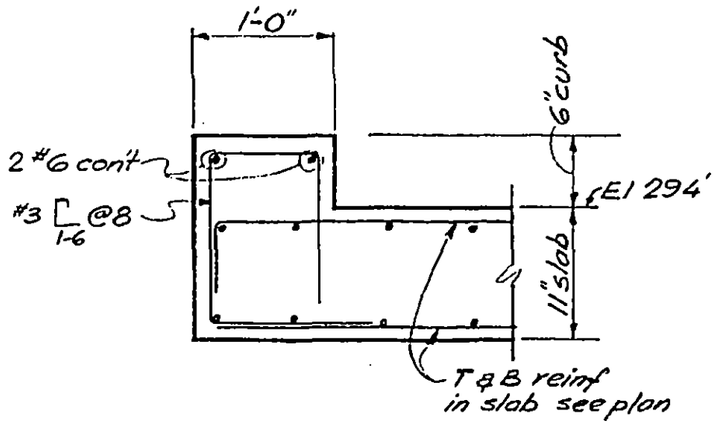

Section H-H
(1"=1'-0")

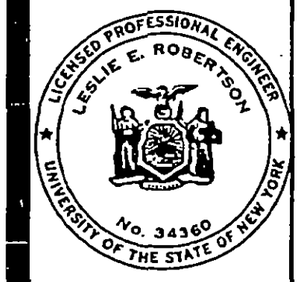

DESIGNED

DRAWN J.G.

REVIEWED E.L.

8-JK8-46.7

SKILLING, HELLE, CHRISTIANSEN, ROBERTSON — Structural & Civil Engineers

PROJECT THE WORLD TRADE CENTER | TITLE SECTIONS AT EL. 294 | DATE 9-3-69

REVISIONS

10-29-71

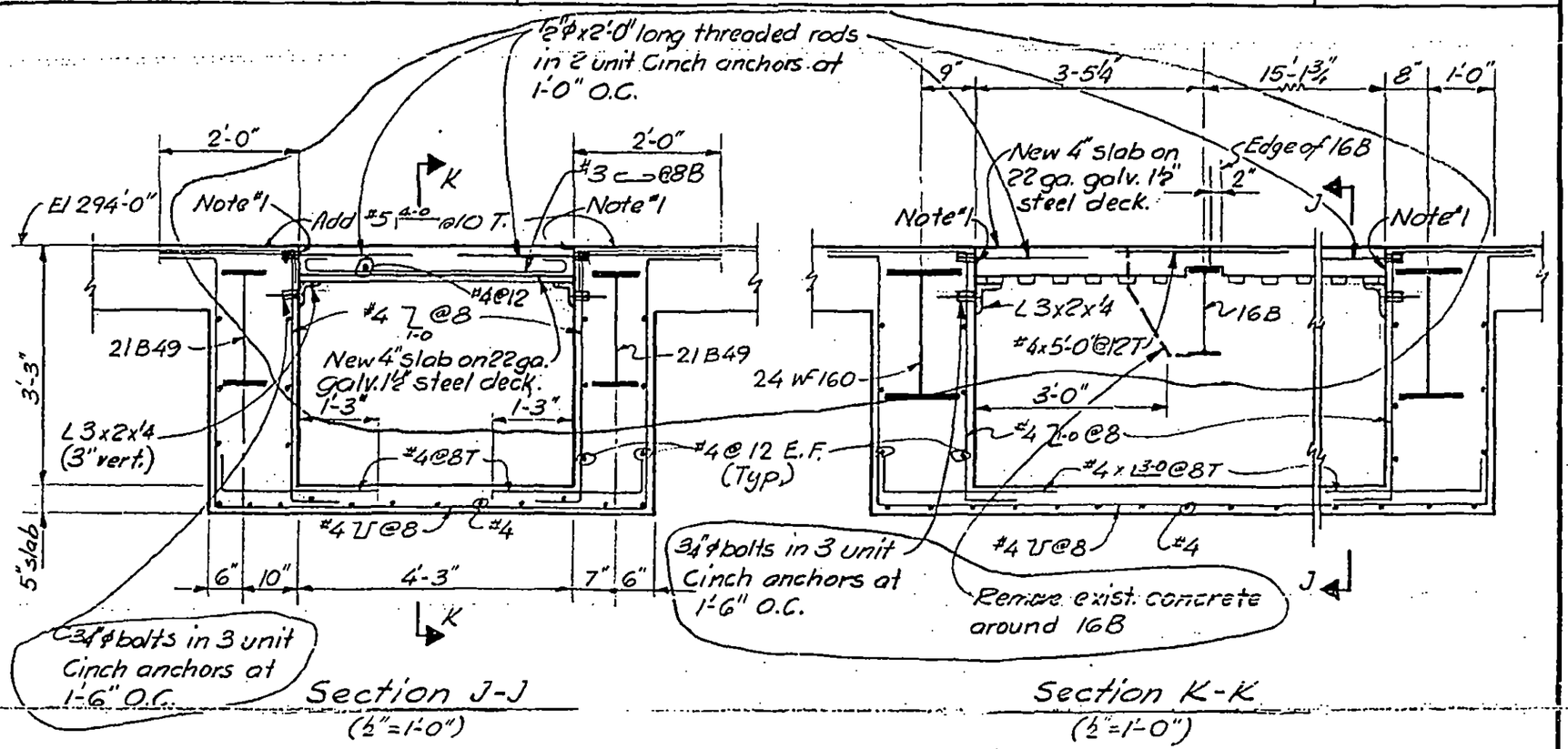

Section J-J
(½"=1'-0")

Section K-K
(½"=1'-0")

Note:
1. Coat entire surface of existing concrete with approved epoxy bonding compound prior to casting new slab.

LICENSED PROFESSIONAL ENGINEER
LESLIE E. ROBERTSON
No. 34360
UNIVERSITY OF THE STATE OF NEW YORK

DESIGNED

DRAWN J.G.

REVIEWED E.L.

8-JK8-46.8

SKILLING, HELLE, CHRISTIANSEN, ROBERTSON — Structural & Civil Engineers

PROJECT THE WORLD TRADE CENTER | TITLE SECTION AT EL. 294 | DATE 11-7-69

REVISIONS

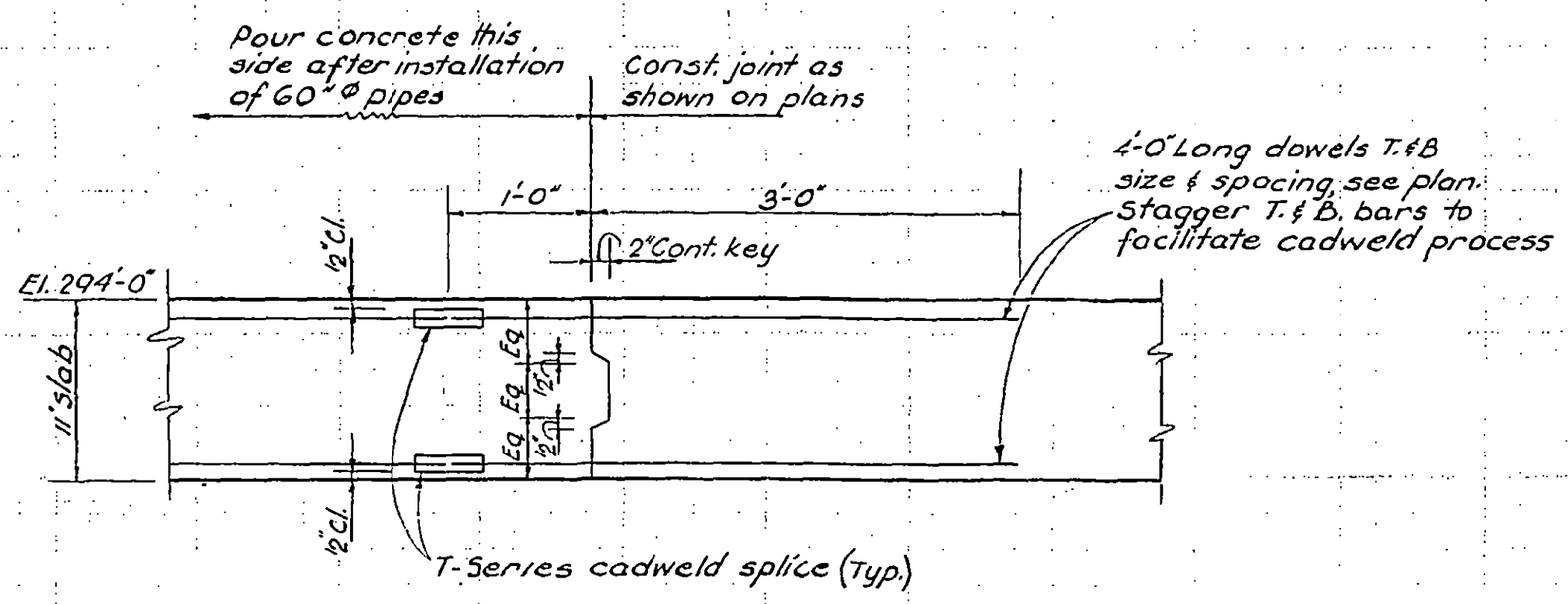

Section L-L
(1"=1'-0")

LICENSED PROFESSIONAL ENGINEER
LESLIE E. ROBERTSON
No. 34360
UNIVERSITY OF THE STATE OF NEW YORK

DESIGNED

DRAWN D. Huggins

REVIEWED E.L.

8-JK8-46.9

SKILLING, HELLE, CHRISTIANSEN, ROBERTSON — Structural & Civil Engineers

PROJECT THE WORLD TRADE CENTER | TITLE SECTION AT EL. 284'-0" | DATE 11-7-69

REVISIONS

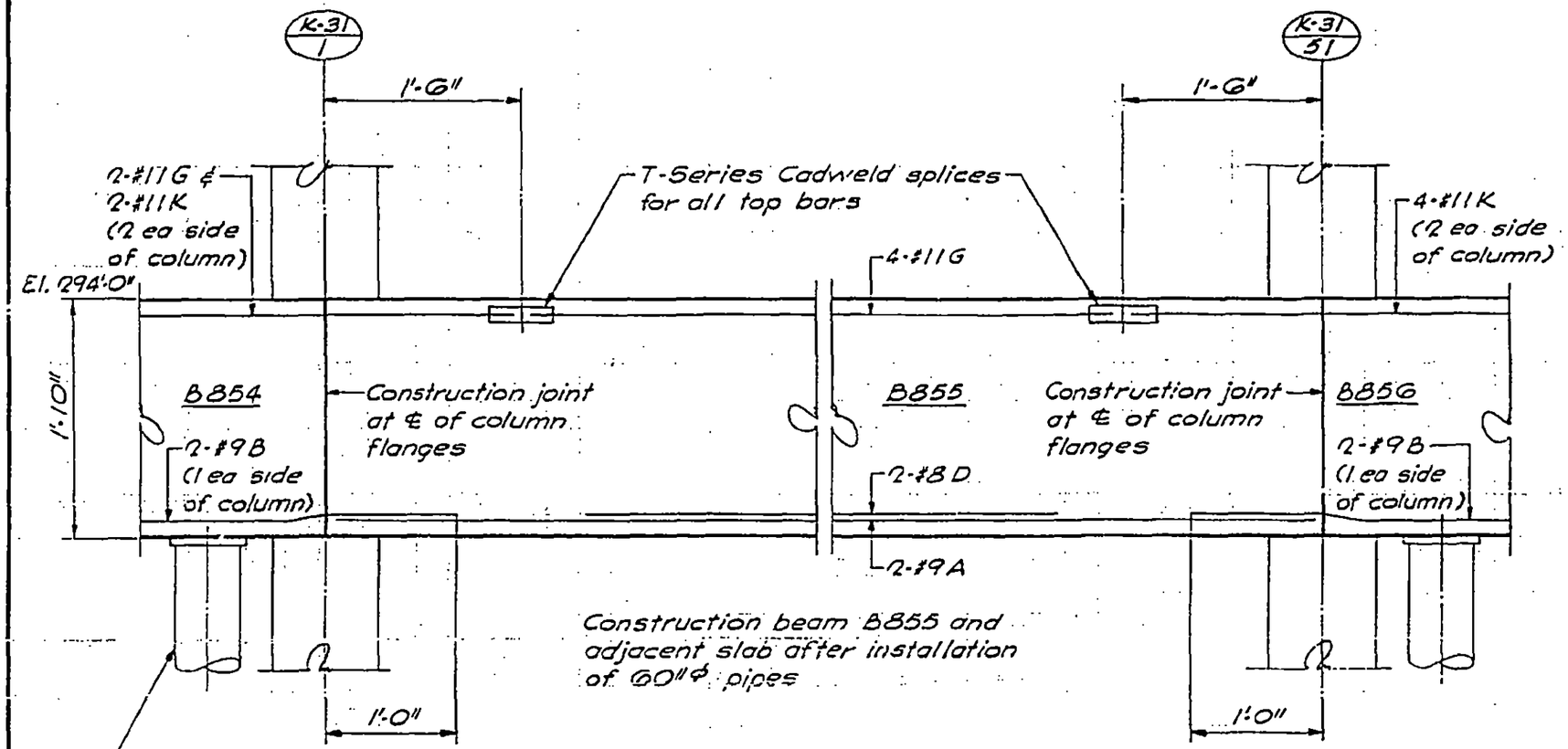

Construction beam B855 and adjacent slab after installation of 60"Φ pipes

Provide 1-6"Φ standard pipe support under B854. Pipe sits on floor at el. 284'-0". Place as close to column as possible. (Typical under B856 next to col K31-51).

SECTION M-M

(1"=1'-0")

LICENSED PROFESSIONAL ENGINEER — LESLIE E. ROBERTSON — No. 34360 — UNIVERSITY OF THE STATE OF NEW YORK

DESIGNED E.L.

DRAWN G.K.

REVIEWED

8-JK8-46.10

SKILLING, HELLE, CHRISTIANSEN, ROBERTSON — Structural & Civil Engineers

PROJECT THE WORLD TRADE CENTER | TITLE SECTION AT EL. 294'-0" | DATE 2-5-70

REVISIONS

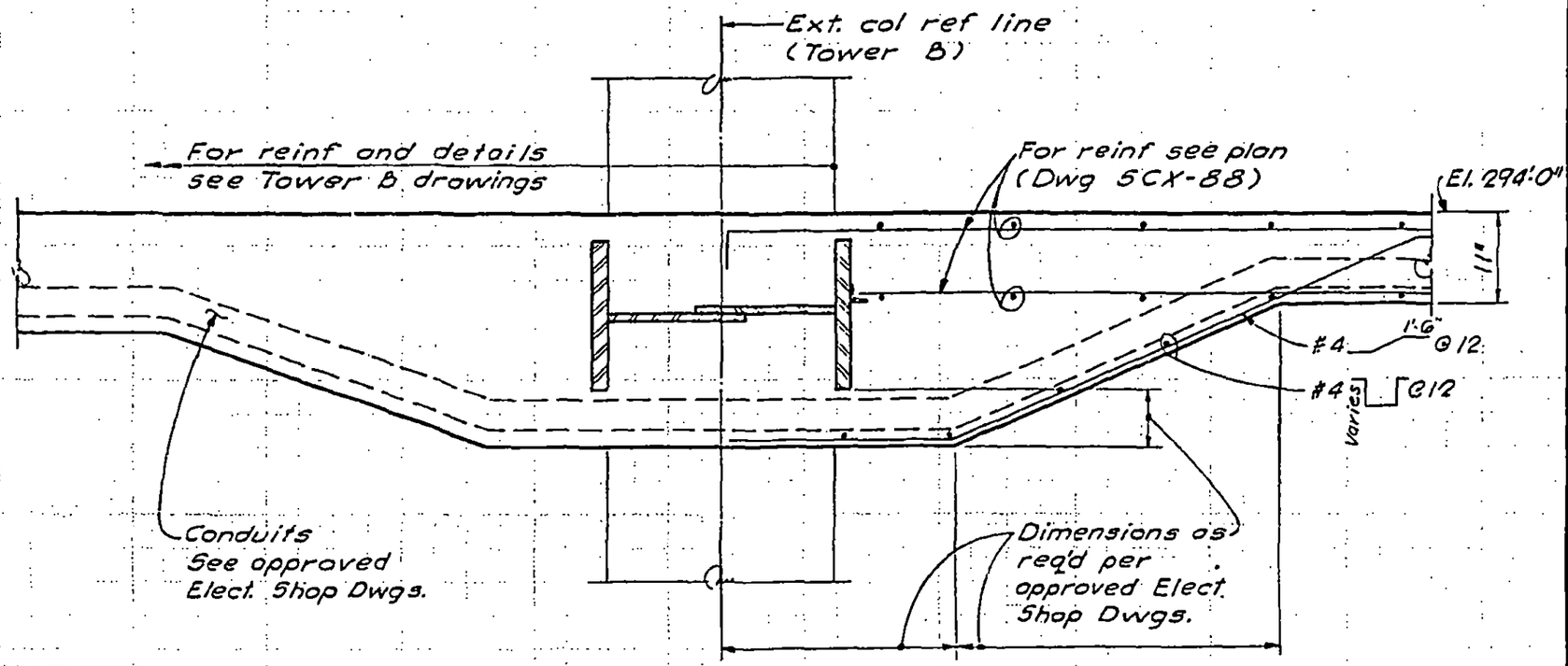

SECTION N-N

(3/4" = 1'-0")

LICENSED PROFESSIONAL ENGINEER
LESLIE E. ROBERTSON
No. 34360
UNIVERSITY OF THE STATE OF NEW YORK

DESIGNED T.O.
DRAWN G.K.
REVIEWED E.L.

8-JK8-46.11

SKILLING, HELLE, CHRISTIANSEN, ROBERTSON — Structural & Civil Engineers

PROJECT THE WORLD TRADE CENTER | TITLE CONCRETE SUPPORT FOR 24"Φ STEAM MAIN | DATE 2-5-70

REVISIONS

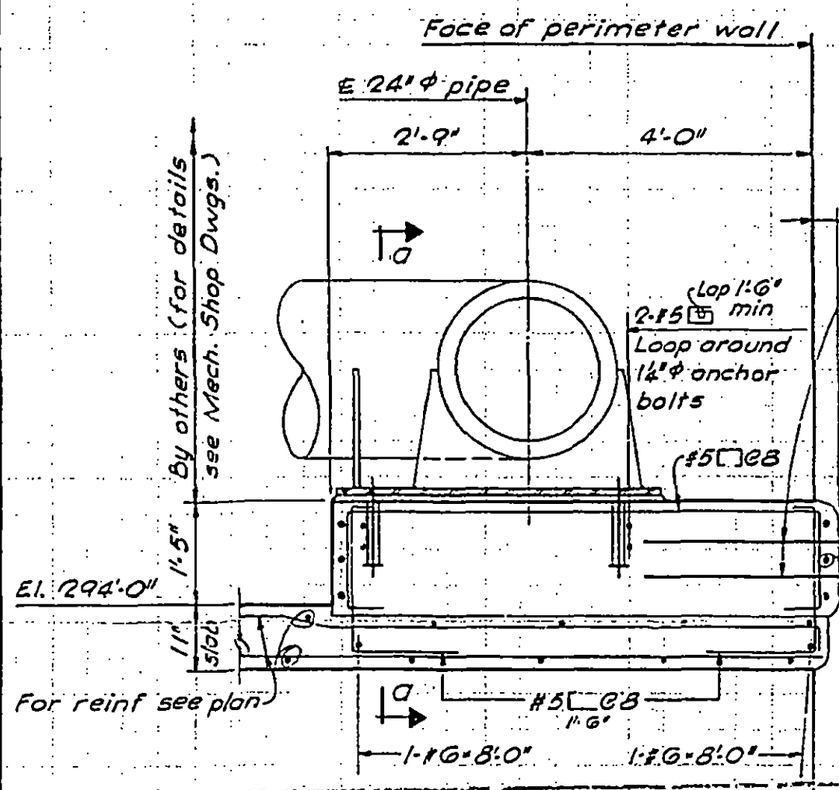

SECTION P-P

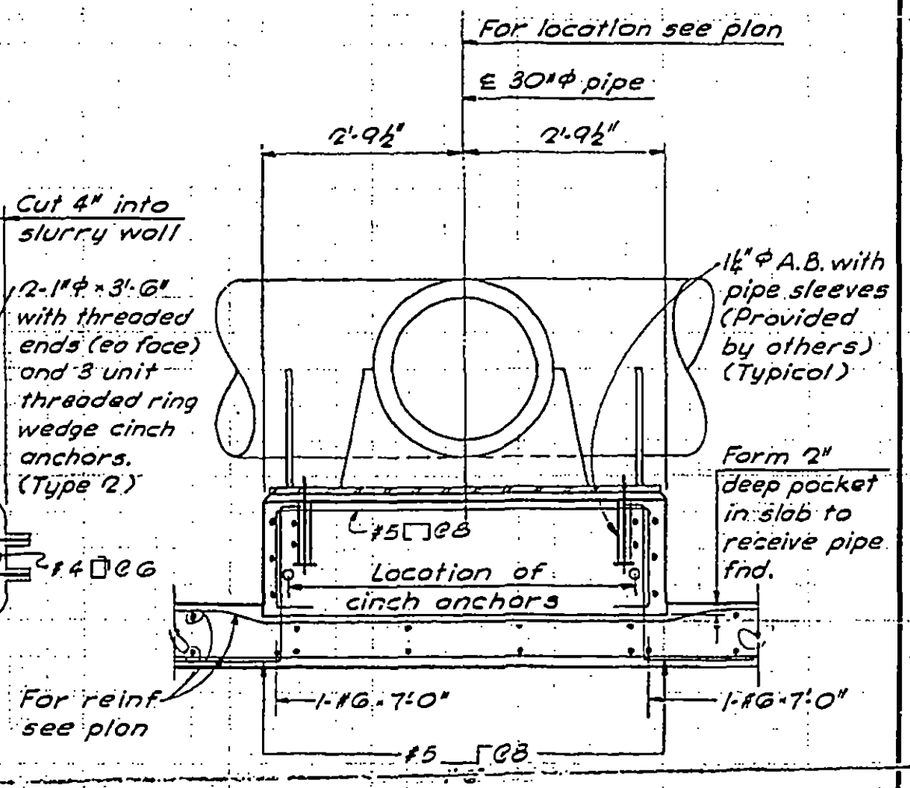

Section a-a

NOTES:

1. See Mech. Shop Dwg. 57-121 (F & S Mfg. Corp.) for detail of pipe supporting assembly and A. bolts.
2. All concrete to be f'_c = 3000 psi.

LICENSED PROFESSIONAL ENGINEER — LESLIE E. ROBERTSON — No. 34360 — UNIVERSITY OF THE STATE OF NEW YORK

DESIGNED T. O.

DRAWN G. K.

REVIEWED E. L.

(½" = 1'-0")

8-JKB-46.12

SKILLING, HELLE, CHRISTIANSEN, ROBERTSON — Structural & Civil Engineers

PROJECT THE WORLD TRADE CENTER | TITLE SECTION AT ELEVATION 294'-0" | DATE 3/30/70

REVISIONS

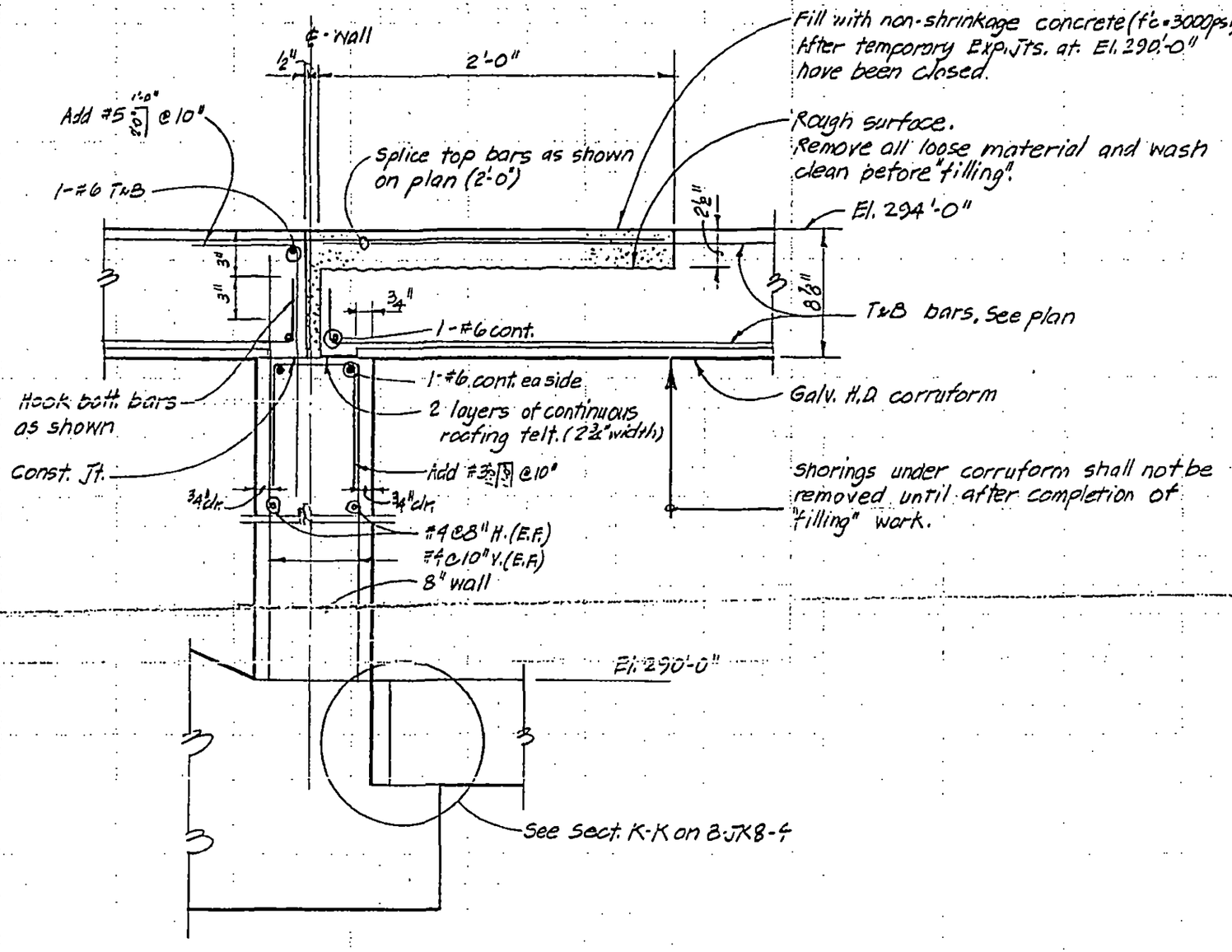

SECTION Q-Q

1½" = 1'-0"

LICENSED PROFESSIONAL ENGINEER — LESLIE E. ROBERTSON — No. 34360 — UNIVERSITY OF THE STATE OF NEW YORK

DESIGNED

DRAWN P. Ozeki

REVIEWED E.L.

8-JK8-46.13

SKILLING, HELLE, CHRISTIANSEN, ROBERTSON — Structural & Civil Engineers

PROJECT THE WORLD TRADE CENTER | TITLE SECTION AT ELEVATION 294'-0" | DATE 3/30/70

REVISIONS

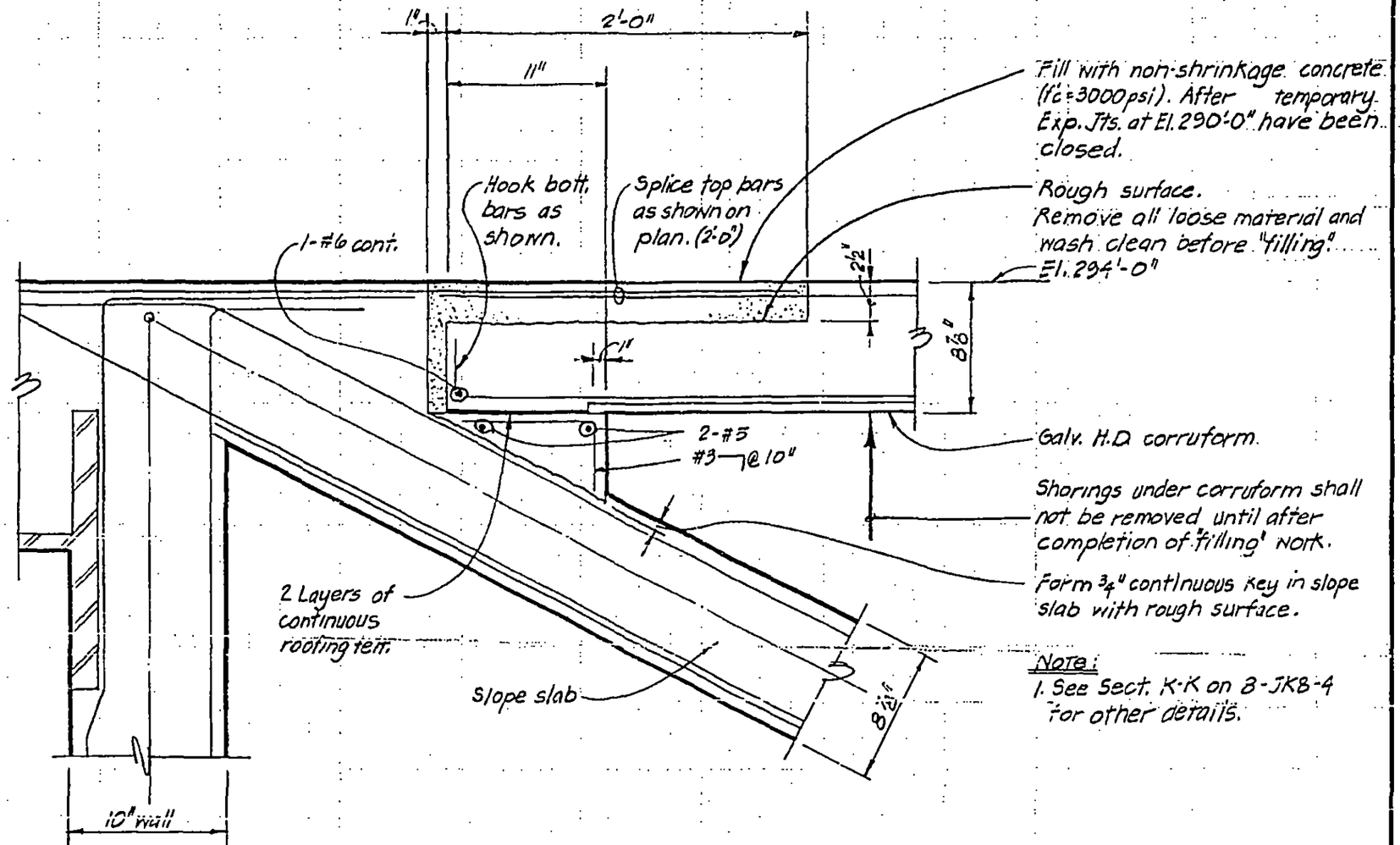

Note:
1. See Sect. K-K on 8-JK8-4 for other details.

SECTION R-R
(1½" = 1'-0")

LICENSED PROFESSIONAL ENGINEER — LESLIE E. ROBERTSON — No. 34360 — UNIVERSITY OF THE STATE OF NEW YORK

DESIGNED

DRAWN P.M. Ozeki

REVIEWED E.L.

8-JK8-46.14

SKILLING, HELLE, CHRISTIANSEN, ROBERTSON — Structural & Civil Engineers

PROJECT THE WORLD TRADE CENTER | TITLE SECTIONS AT EL. 284'-0" | DATE 12-18-68

REVISIONS

4-21-69

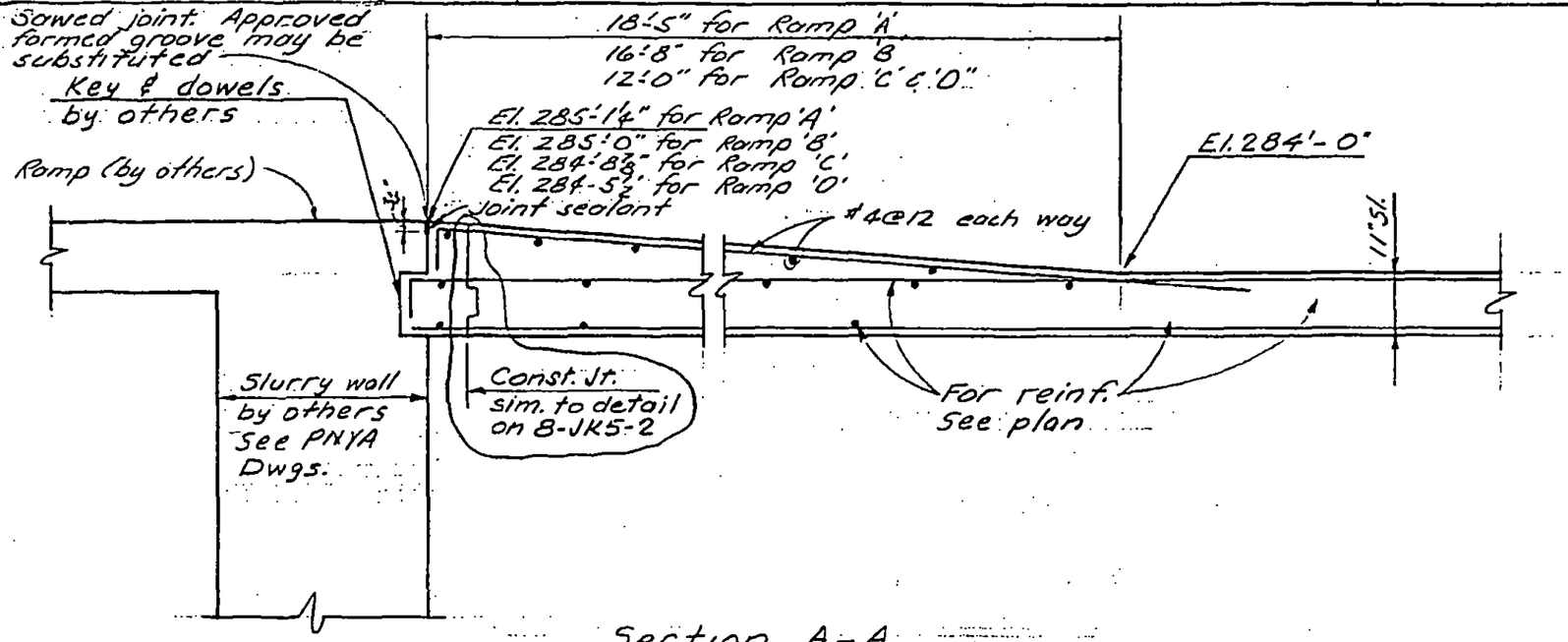

Section A-A

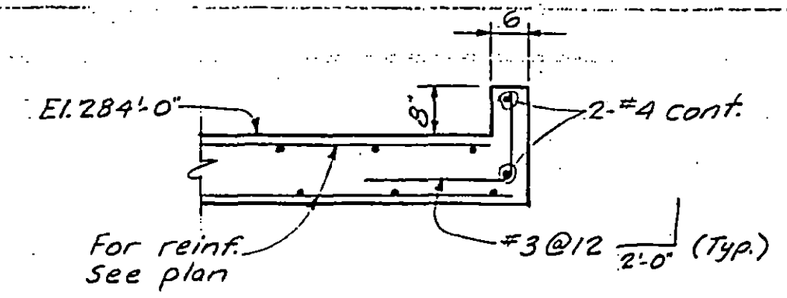

Section B-B

LICENSED PROFESSIONAL ENGINEER — LESLIE E. ROBERTSON — No. 34360 — UNIVERSITY OF THE STATE OF NEW YORK

DESIGNED

DRAWN S.C.

REVIEWED J.M. & E.L.

8-JKB-47.1

SKILLING, HELLE, CHRISTIANSEN, ROBERTSON — Structural & Civil Engineers

PROJECT: THE WORLD TRADE CENTER | TITLE: SECTIONS AT EL. 284'-0" | DATE: 12-18-68

REVISIONS

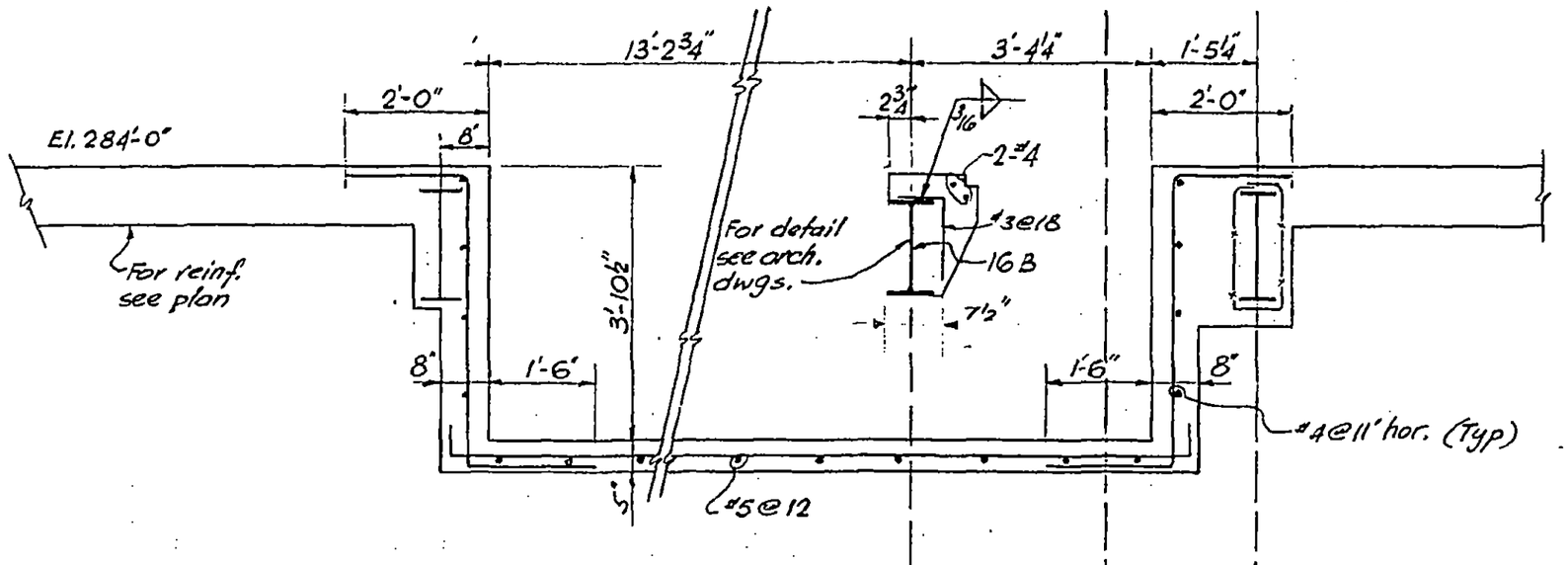

Section D-D

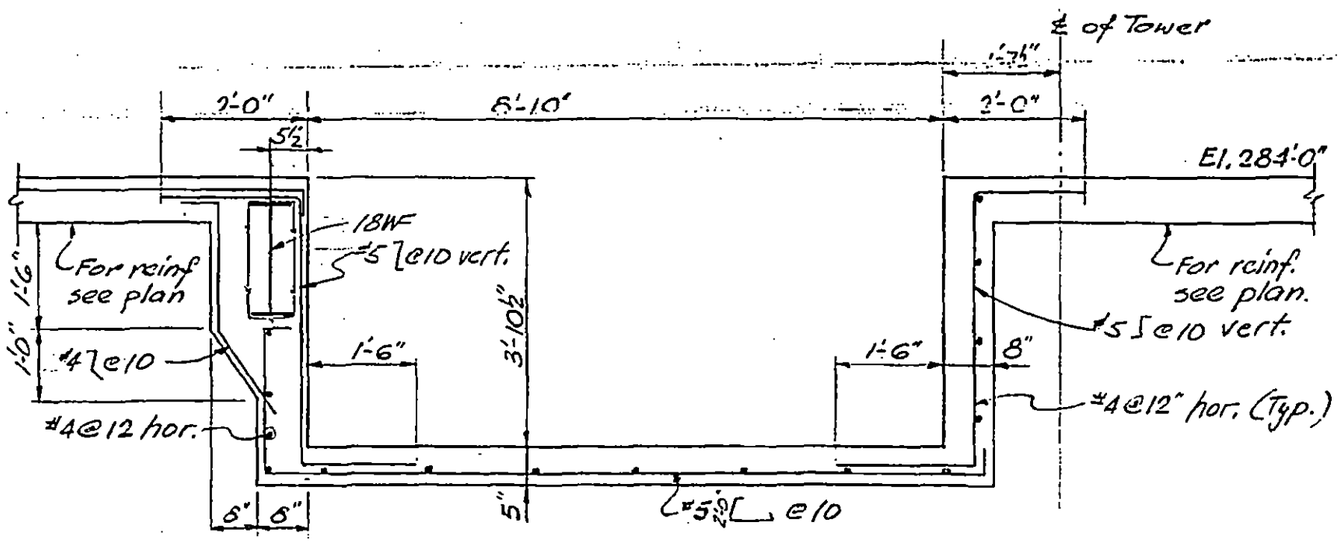

Section E-E

LICENSED PROFESSIONAL ENGINEER — LESLIE E. ROBERTSON — No. 34360 — UNIVERSITY OF THE STATE OF NEW YORK

DESIGNED

DRAWN: S.C.

REVIEWED: J.M. & E.L.

8-JK8-47.2

SKILLING, HELLE, CHRISTIANSEN, ROBERTSON — Structural & Civil Engineers

PROJECT THE WORLD TRADE CENTER | TITLE SECTION AT ELEV. 284' | DATE 4-2-69

REVISIONS

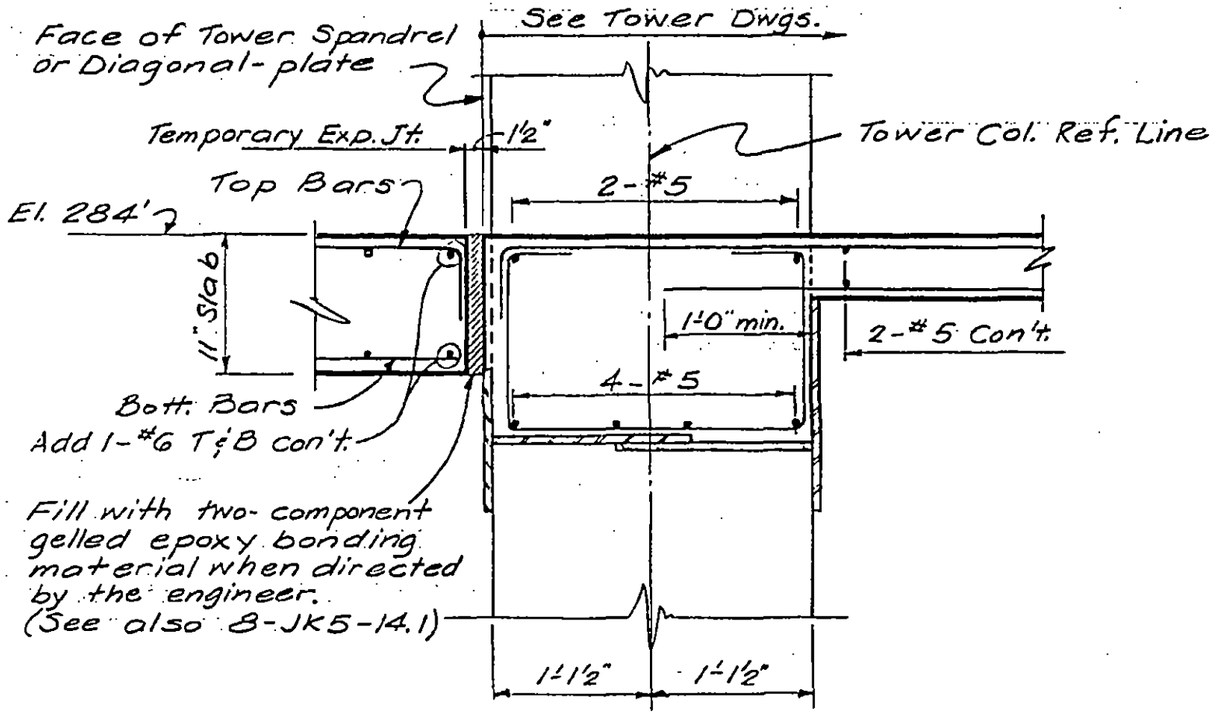

Section F-F
(SCJ-68)

Notes:
1) See also 8-JK5-14.1.

LICENSED PROFESSIONAL ENGINEER
LESLIE E. ROBERTSON
No. 34360
UNIVERSITY OF THE STATE OF NEW YORK

DESIGNED

DRAWN
G.S.

REVIEWED
E.L.

8-JK8-47.3

SKILLING, HELLE, CHRISTIANSEN, ROBERTSON — Structural & Civil Engineers

PROJECT: THE WORLD TRADE CENTER | TITLE: SECTION AT EL 284'-0" | DATE: 4-21-69

REVISIONS

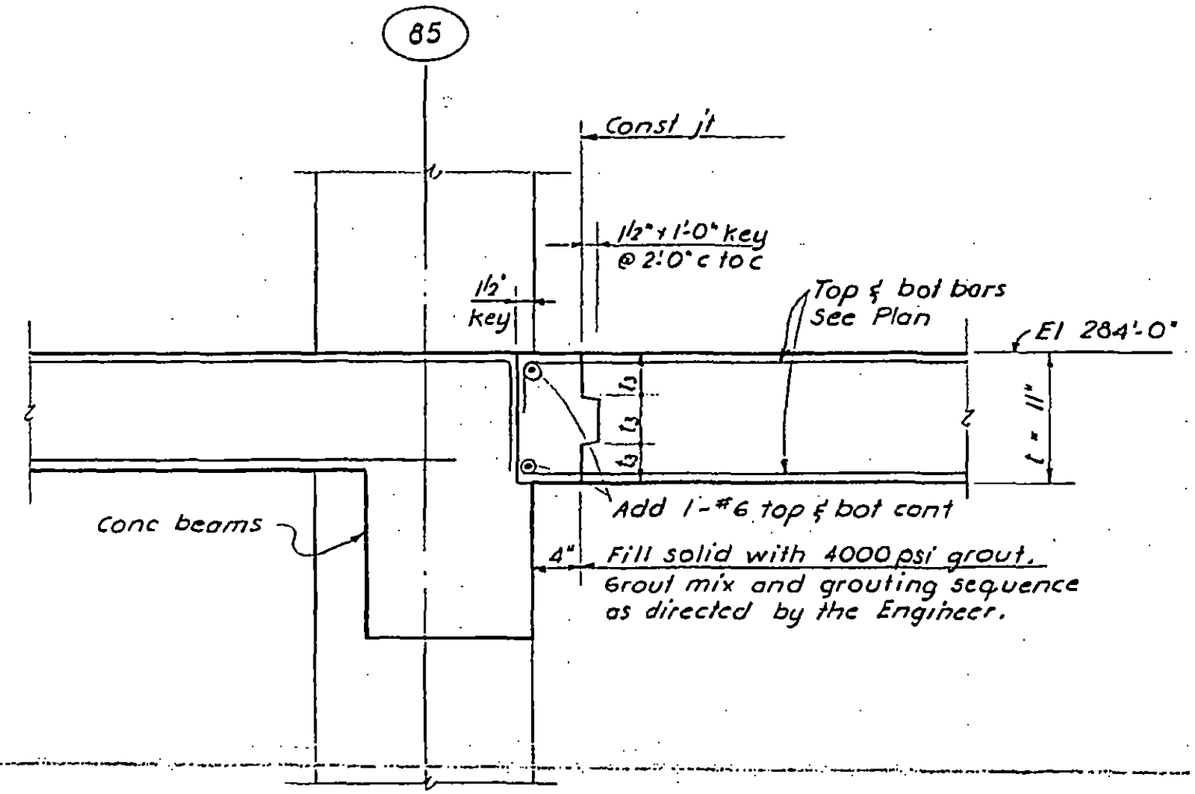

Section 6-6

LICENSED PROFESSIONAL ENGINEER
LESLIE E. ROBERTSON
No. 34360
UNIVERSITY OF THE STATE OF NEW YORK

DESIGNED

DRAWN F. Smith

REVIEWED E.L.

8-JK8-47.4

SKILLING, HELLE, CHRISTIANSEN, ROBERTSON — Structural & Civil Engineers

PROJECT THE WORLD TRADE CENTER | TITLE SECTIONS AT EL. 284' | DATE 5-16-69

REVISIONS

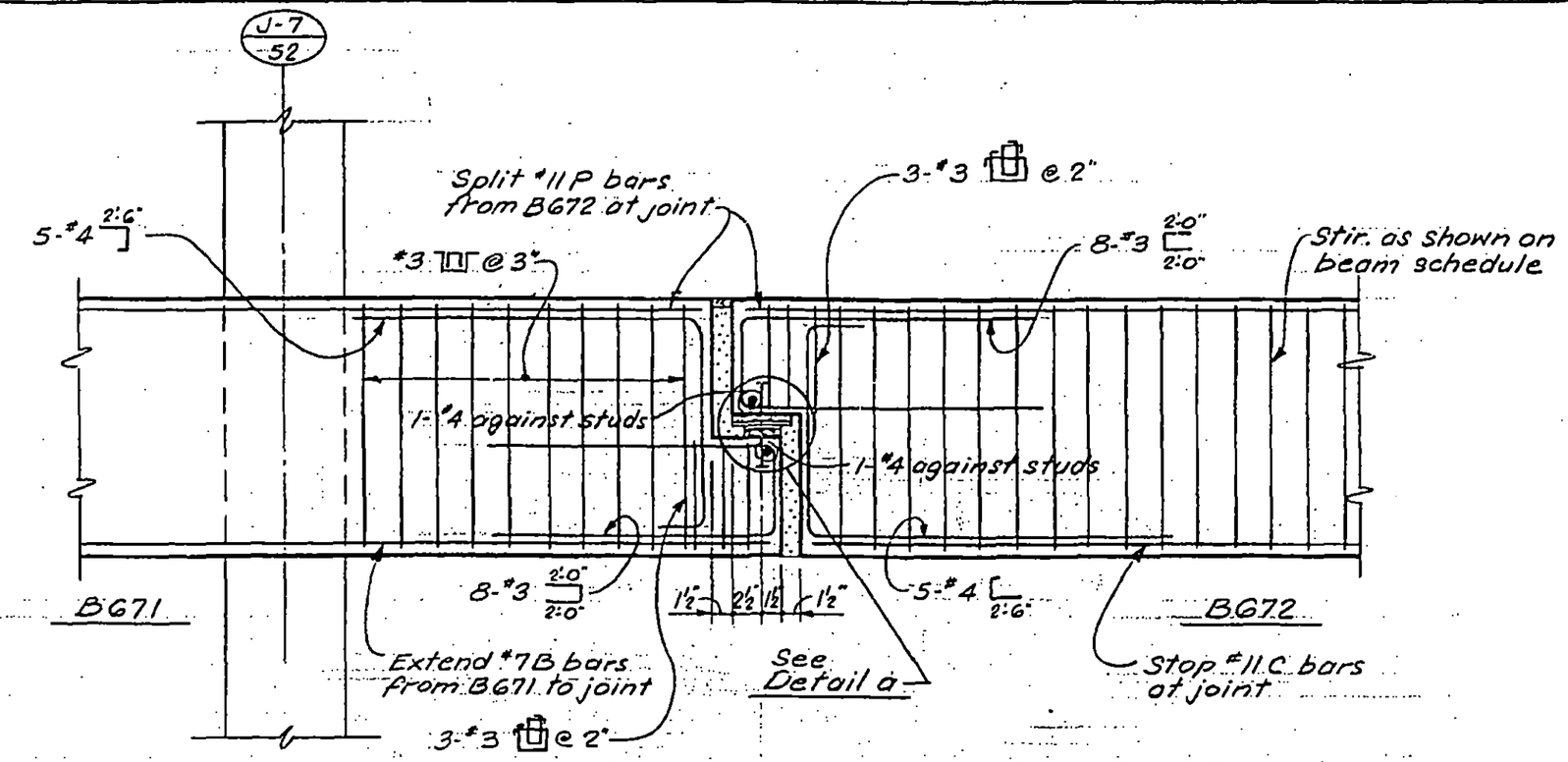

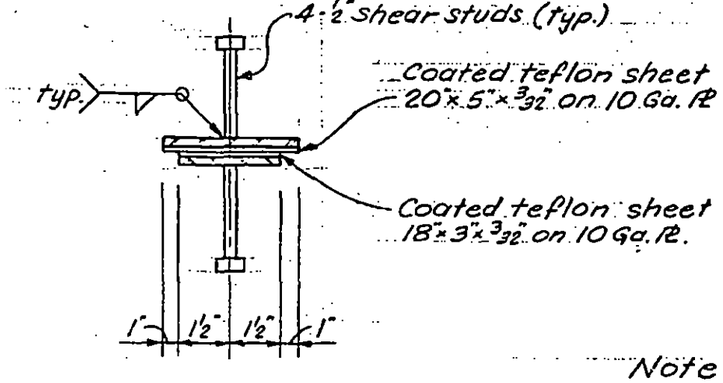

Detail-a

Note:
See notes on 8-JK5-14.1

LICENSED PROFESSIONAL ENGINEER
LESLIE E. ROBERTSON
No. 34360
UNIVERSITY OF THE STATE OF NEW YORK

DESIGNED

DRAWN S.C.

REVIEWED E.L.

8-JK8-47.5

SKILLING, HELLE, CHRISTIANSEN, ROBERTSON — Structural & Civil Engineers

PROJECT: THE WORLD TRADE CENTER | TITLE: SECTION AT EL. 284'-0" | DATE: 8-29-69

REVISIONS

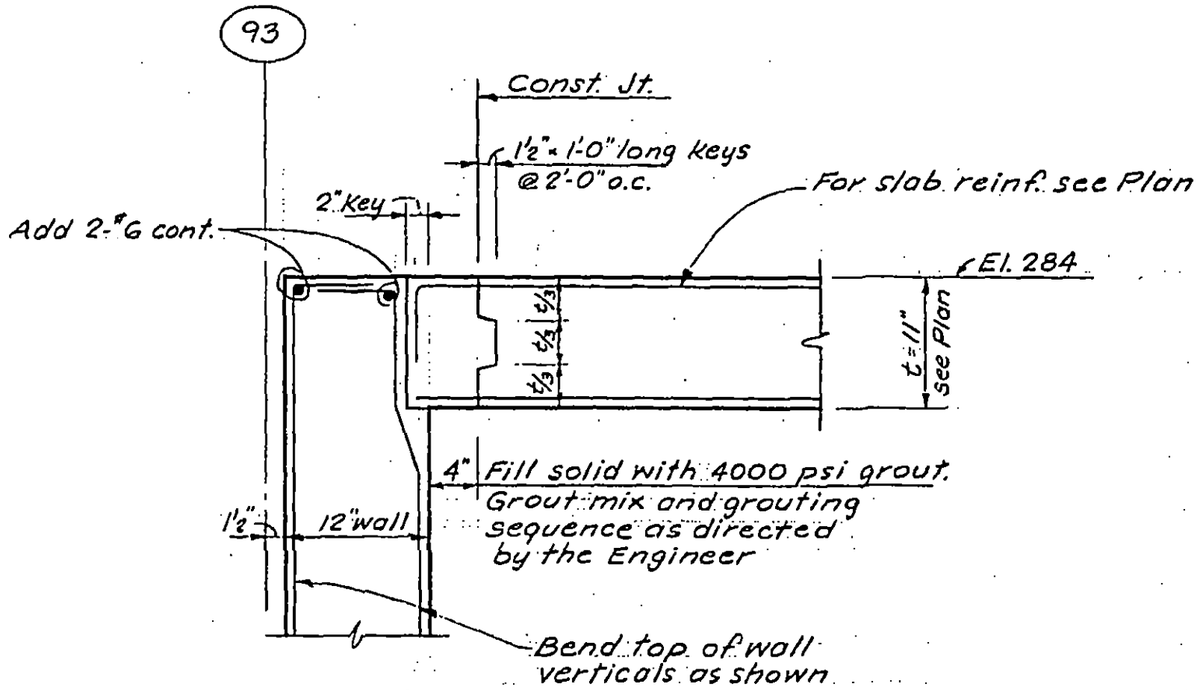

Section H-H
(1" = 1'-0")

Note:
See 8-JK6-2.3 for connection detail between C.I.P. wall & slurry wall.

LICENSED PROFESSIONAL ENGINEER
LESLIE E. ROBERTSON
No. 34360
UNIVERSITY OF THE STATE OF NEW YORK

DESIGNED

DRAWN
S.C.

REVIEWED
E.L.

8-JK8-47.6

SKILLING, HELLE, CHRISTIANSEN, ROBERTSON — Structural & Civil Engineers

PROJECT THE WORLD TRADE CENTER | TITLE SECTION AT EL. 284'-0" | DATE 8-29-69

REVISIONS

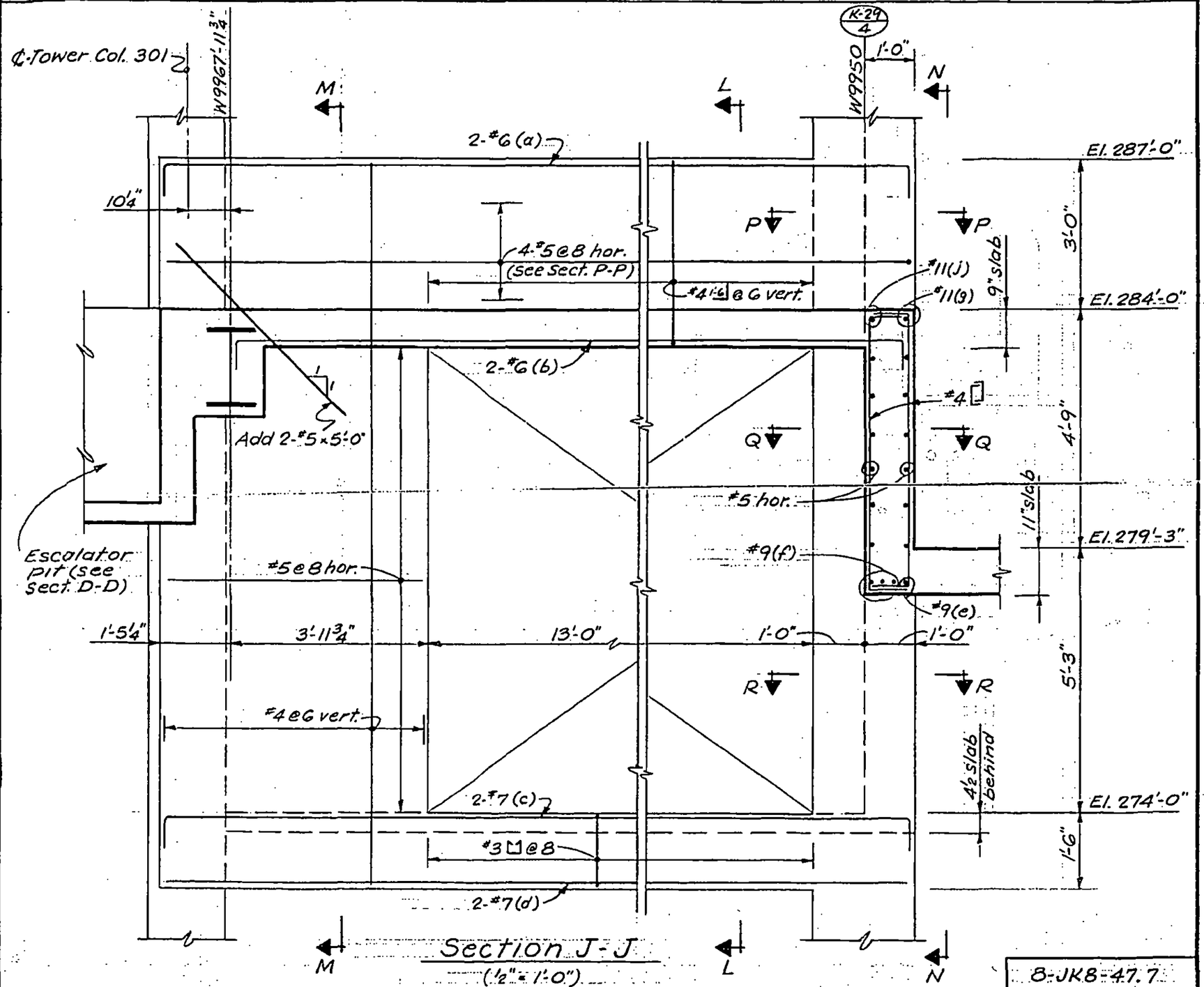

Section J-J
(½" = 1'-0")

8-JK8-47.7

LICENSED PROFESSIONAL ENGINEER
LESLIE E. ROBERTSON
No. 34360
UNIVERSITY OF THE STATE OF NEW YORK

DESIGNED

DRAWN S.C.

REVIEWED E.L.

SKILLING, HELLE, CHRISTIANSEN, ROBERTSON — Structural & Civil Engineers

PROJECT THE WORLD TRADE CENTER | TITLE SECTION AT EL. 284'-0" | DATE 8-29-69

REVISIONS

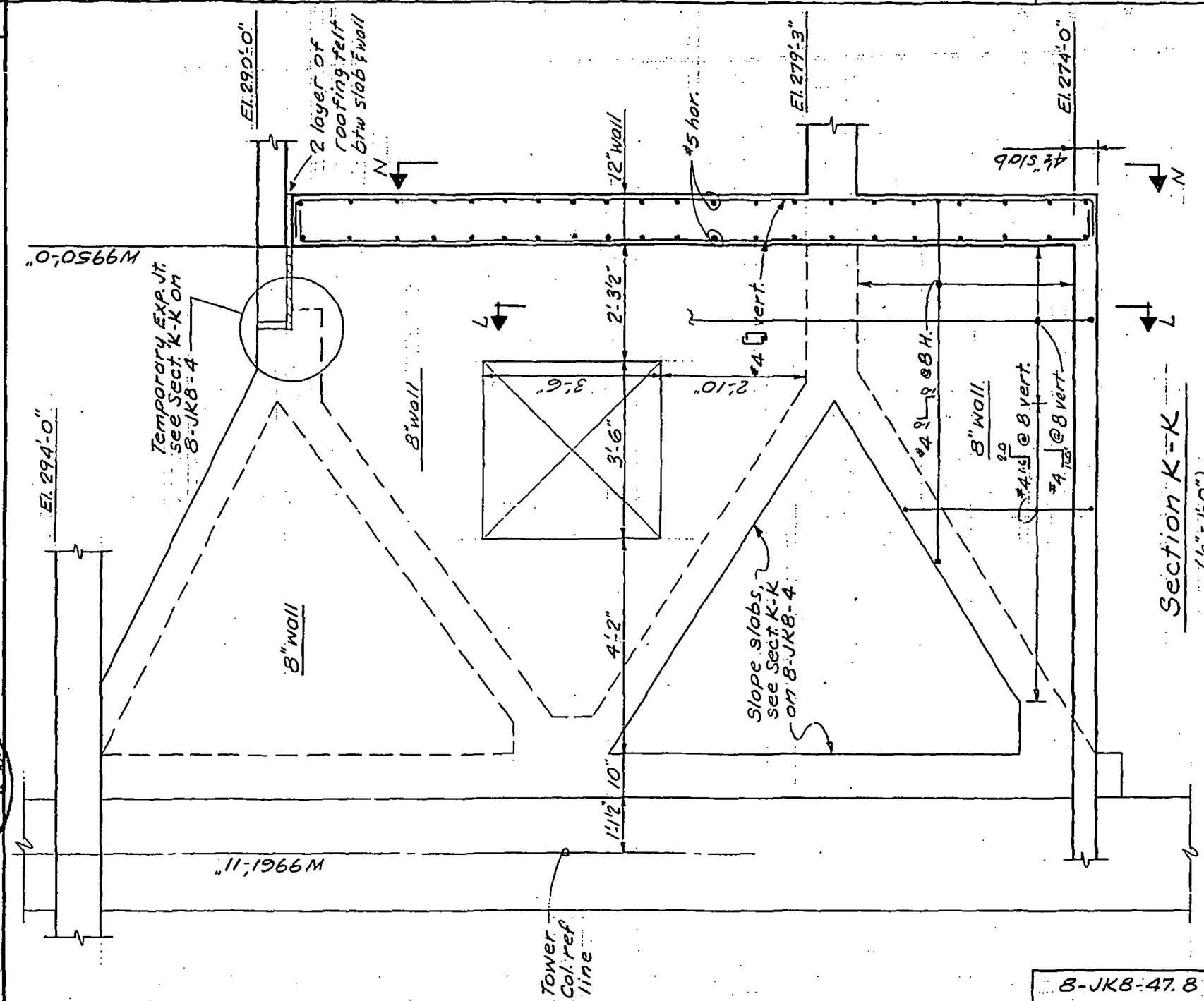

ACCESSED PROFESSIONAL ENGINEER — LESLIE E. ROBERTSON — No. 34360 — UNIVERSITY OF THE STATE OF NEW YORK

DESIGNED

DRAWN S.C.

REVIEWED E.L.

8-JK8-47.8

SKILLING, HELLE, CHRISTIANSEN, ROBERTSON — Structural & Civil Engineers

PROJECT: THE WORLD TRADE CENTER | TITLE: SECTIONS AT EL. 284'-0" | DATE: 8-29-69

REVISIONS

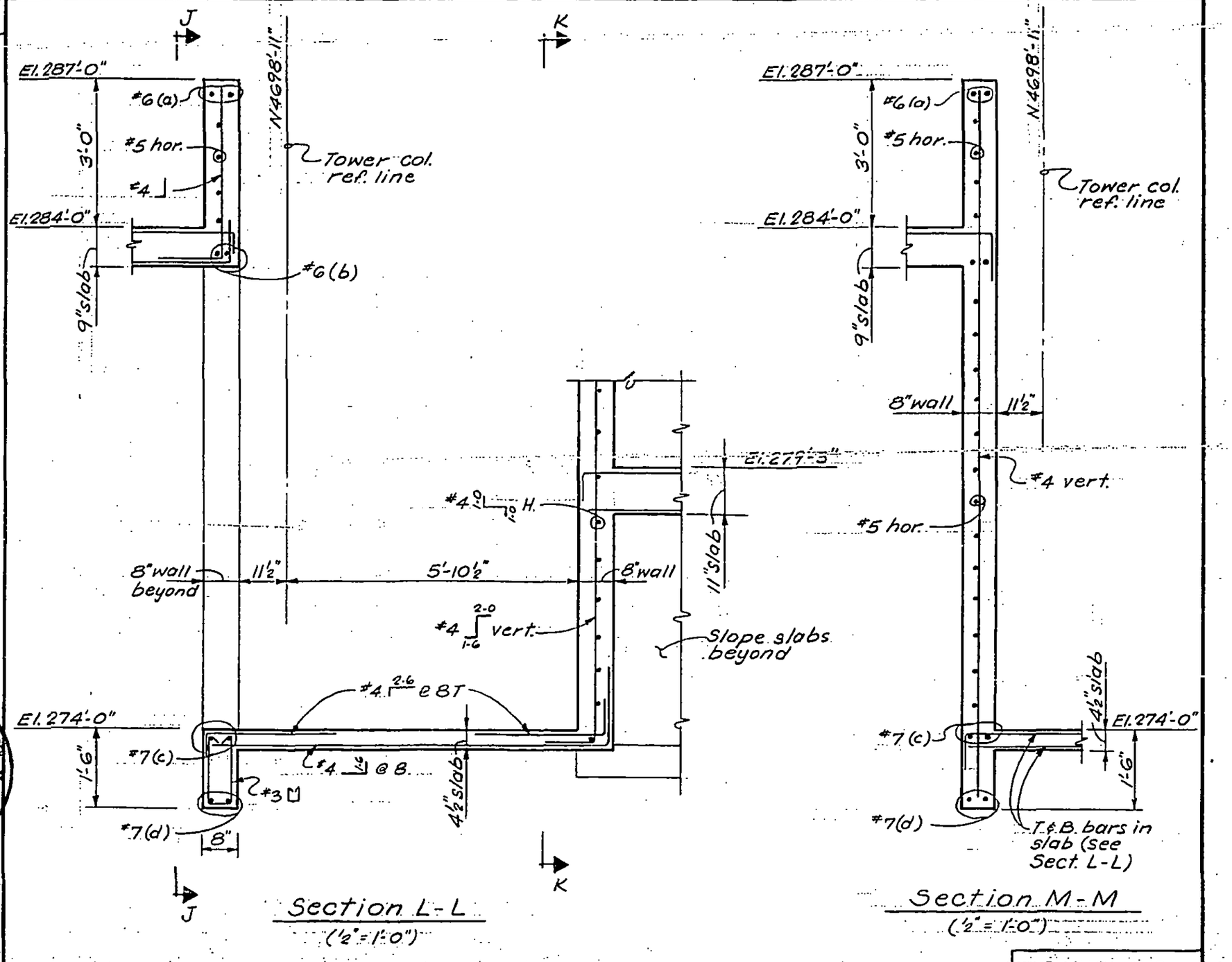

Section L-L
(½" = 1'-0")

Section M-M
(½" = 1'-0")

LESLIE E. ROBERTSON — REGISTERED PROFESSIONAL ENGINEER — No. 34360 — UNIVERSITY OF THE STATE OF NEW YORK

DESIGNED

DRAWN: S.C.

REVIEWED: E.L.

8-JK8-47.9

SKILLING, HELLE, CHRISTIANSEN, ROBERTSON — Structural & Civil Engineers

PROJECT: THE WORLD TRADE CENTER | TITLE: SECTIONS AT EL 284'-0" | DATE: 8-29-69

REVISIONS: 12-12-69

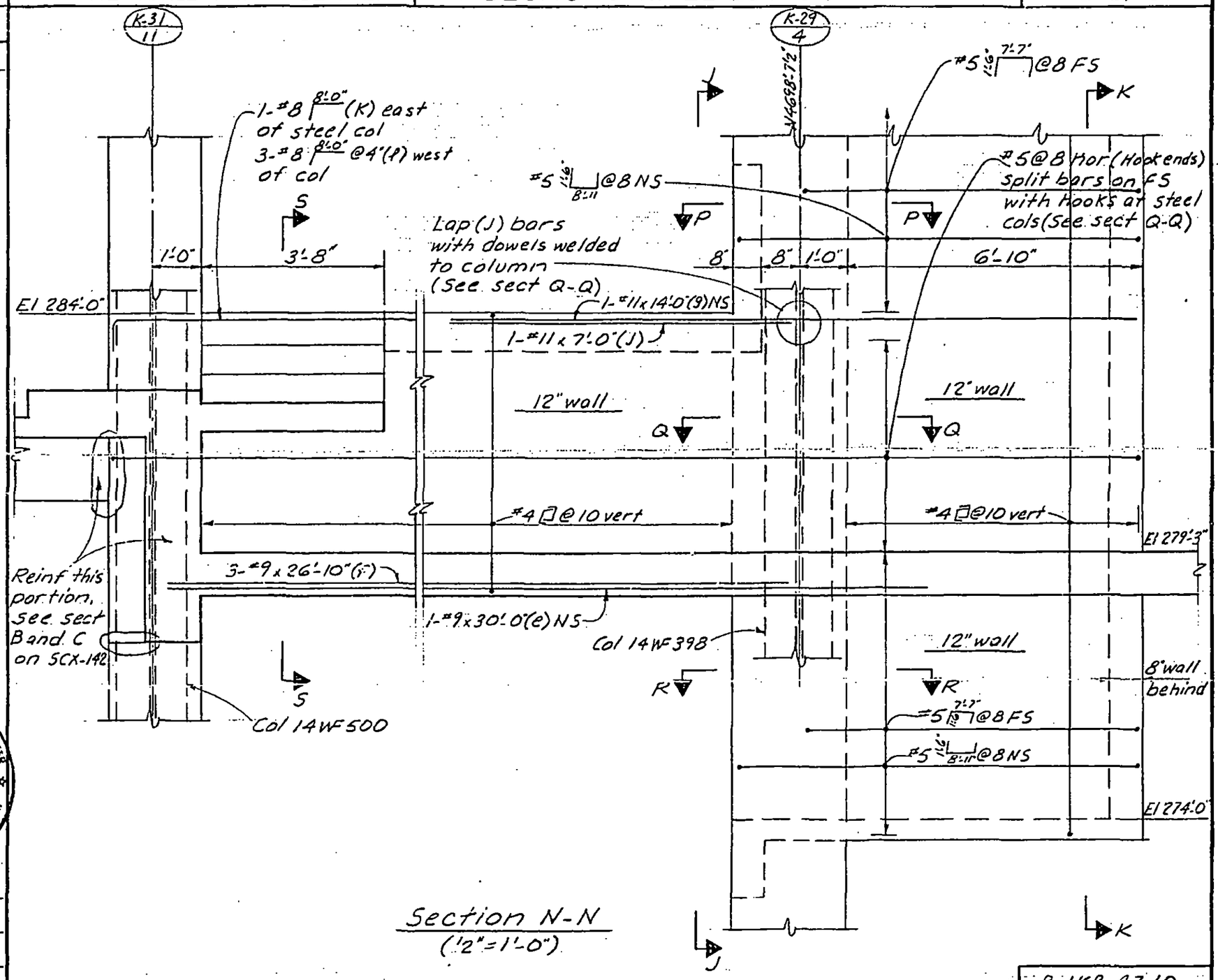

Section N-N
(1/2" = 1'-0")

LICENSED PROFESSIONAL ENGINEER — LESLIE E. ROBERTSON — No. 34360 — UNIVERSITY OF THE STATE OF NEW YORK

DESIGNED

DRAWN: A. FRANQUI

REVIEWED: E.L.

8-JK8-47.10

SKILLING, HELLE, CHRISTIANSEN, ROBERTSON — Structural & Civil Engineers

PROJECT THE WORLD TRADE CENTER | TITLE SECTIONS AT EL 284'-0" | DATE 8-29-69

REVISIONS

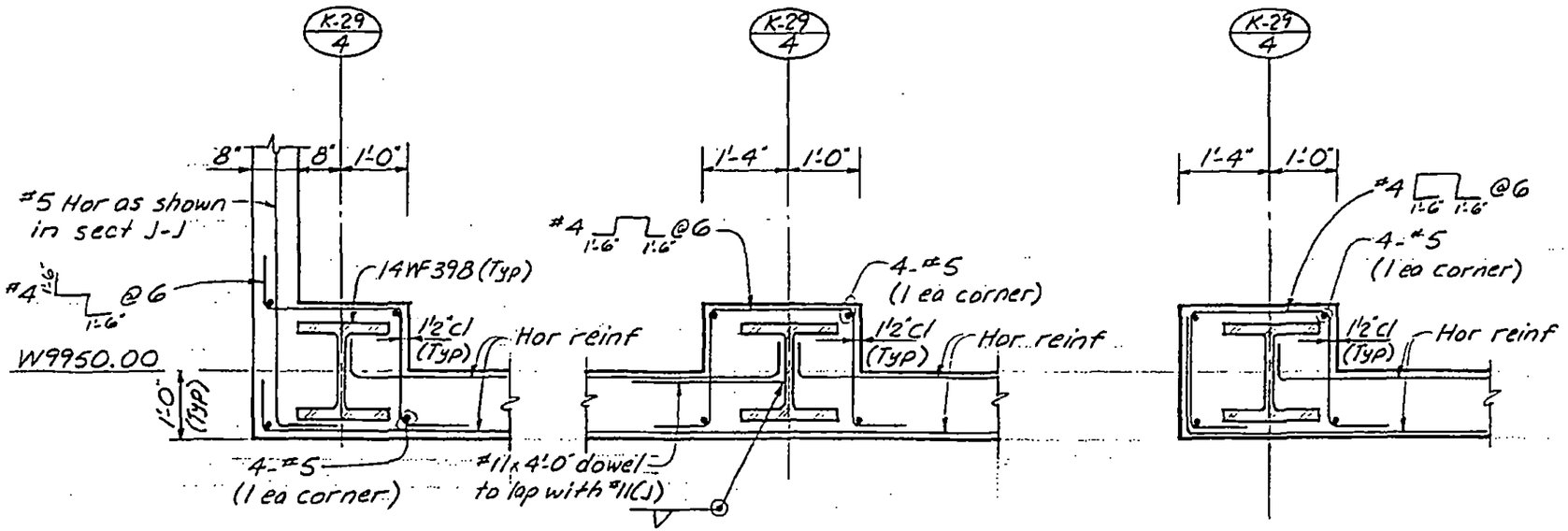

Section P-P
(½" = 1'-0")

Section Q-Q
(½" = 1'-0")

Section R-R
(½" = 1'-0")

LESLIE E. ROBERTSON — REGISTERED PROFESSIONAL ENGINEER — No. 34360 — UNIVERSITY OF THE STATE OF NEW YORK

DESIGNED

DRAWN
A. FRANQUI

REVIEWED

S-JKO-11.11

SKILLING, HELLE, CHRISTIANSEN, ROBERTSON — Structural & Civil Engineers

PROJECT: THE WORLD TRADE CENTER | TITLE: SECTION AT EL 284'-0" | DATE: 8-29-69

REVISIONS

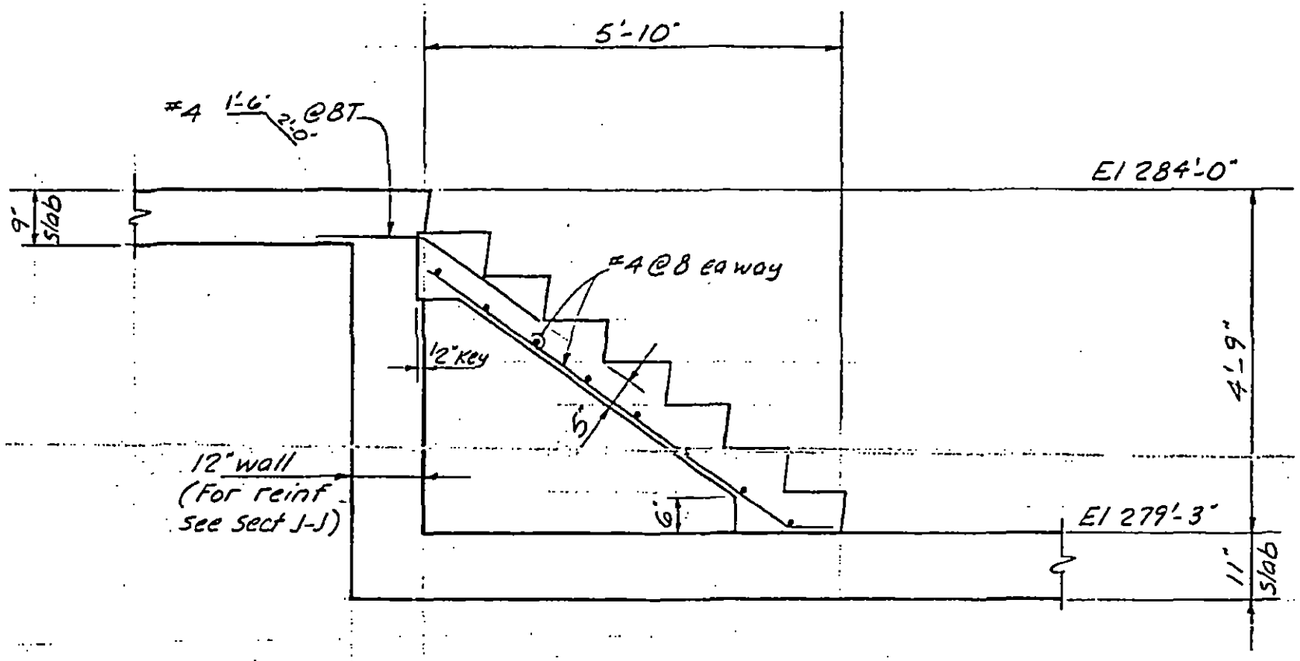

Section S-S
(1/2"=1'-0")

LICENSED PROFESSIONAL ENGINEER
LESLIE E. ROBERTSON
No. 34360
UNIVERSITY OF THE STATE OF NEW YORK

DESIGNED

DRAWN A. FRANQUI

REVIEWED

8-JK8-47.12

SKILLING, HELLE, CHRISTIANSEN, ROBERTSON — Structural & Civil Engineers

PROJECT THE WORLD TRADE CENTER | TITLE SECTION AT EL 284'-0" | DATE 8-29-69

REVISIONS

12-12-69

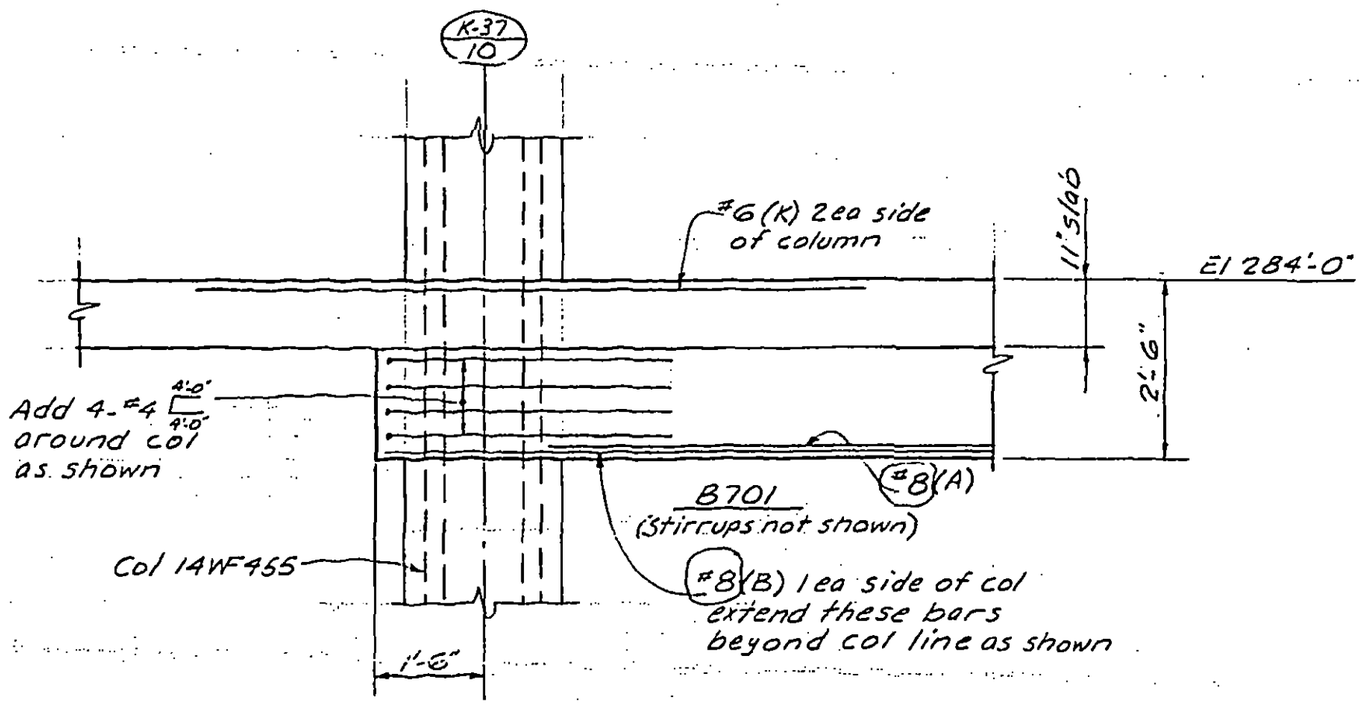

Section T-T
(12" = 1'-0")

LICENSED PROFESSIONAL ENGINEER
LESLIE E. ROBERTSON
No. 34300
UNIVERSITY OF THE STATE OF NEW YORK

DESIGNED

DRAWN A. FRANQUI

REVIEWED E.L.

8-JK8-47.13

SKILLING, HELLE, CHRISTIANSEN, ROBERTSON — Structural & Civil Engineers

PROJECT THE WORLD TRADE CENTER | TITLE SECTION AT EL 284'-0" | DATE 8-29-69

REVISIONS

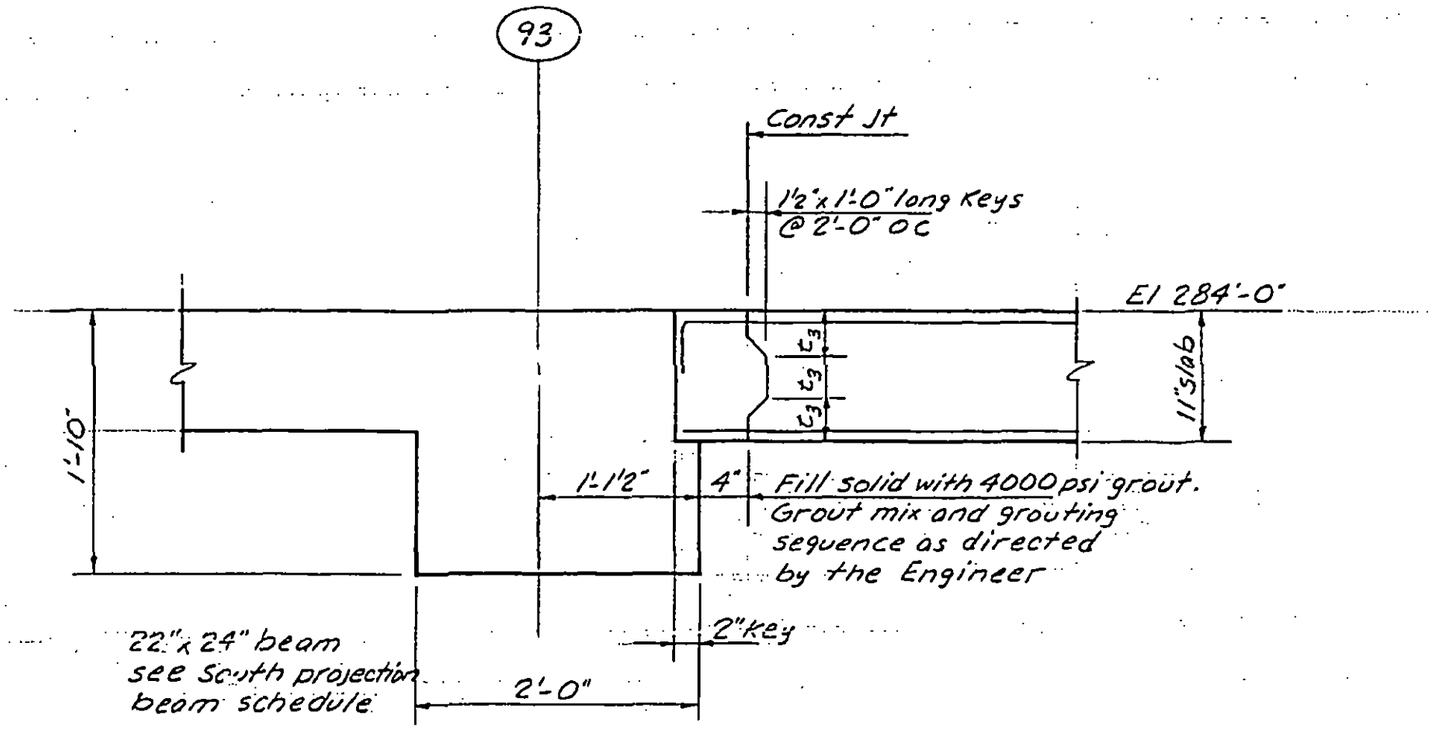

Section U-U
(1"=1'-0")

COMMONWEALTH OF VIRGINIA PROFESSIONAL ENGINEER
LESLIE E. ROBERTSON
No. 34360
UNIVERSITY OF THE STATE OF NEW YORK

DESIGNED

DRAWN A.FRANQUI

REVIEWED E.L.

8-JKB-47.14

SKILLING, HELLE, CHRISTIANSEN, ROBERTSON — Structural & Civil Engineers

PROJECT THE WORLD TRADE CENTER | TITLE SECTIONS AT EL. 284' | DATE 3-19-70

REVISIONS

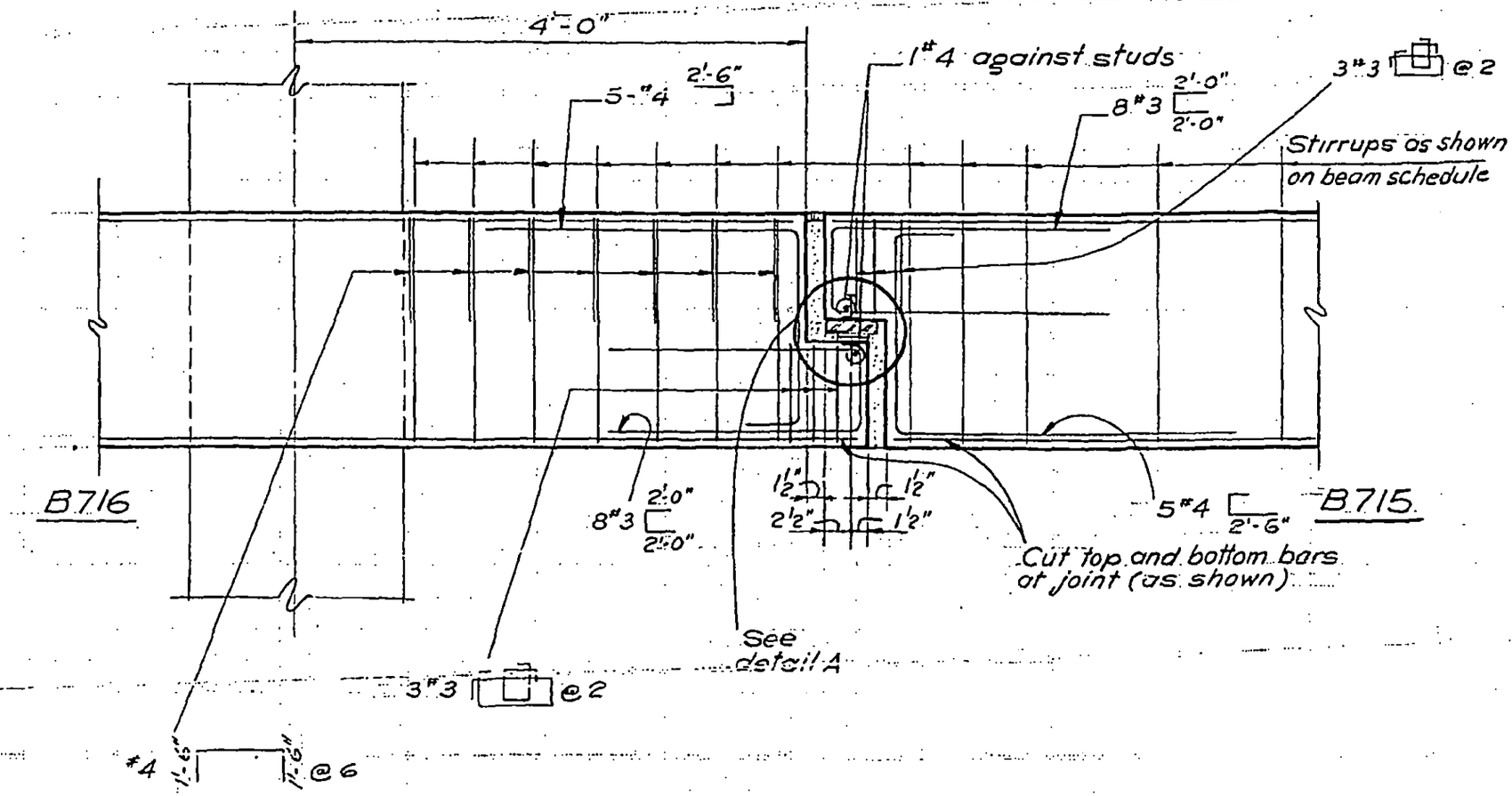

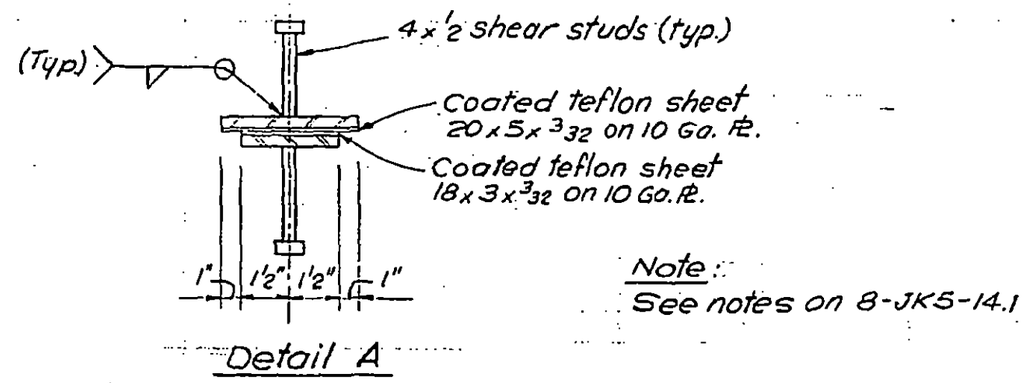

Detail A

Note:
See notes on 8-JK5-14.1

LICENSED PROFESSIONAL ENGINEER LESLIE E. ROBERTSON No. 34360 UNIVERSITY OF THE STATE OF NEW YORK

DESIGNED

DRAWN V.H.A

REVIEWED T.O.

8.-JK8-47.15

SKILLING, HELLE, CHRISTIANSEN, ROBERTSON — Structural & Civil Engineers

PROJECT THE WORLD TRADE CENTER | TITLE FUTURE ELEVATOR H11 PIT | DATE 3-19-70

REVISIONS

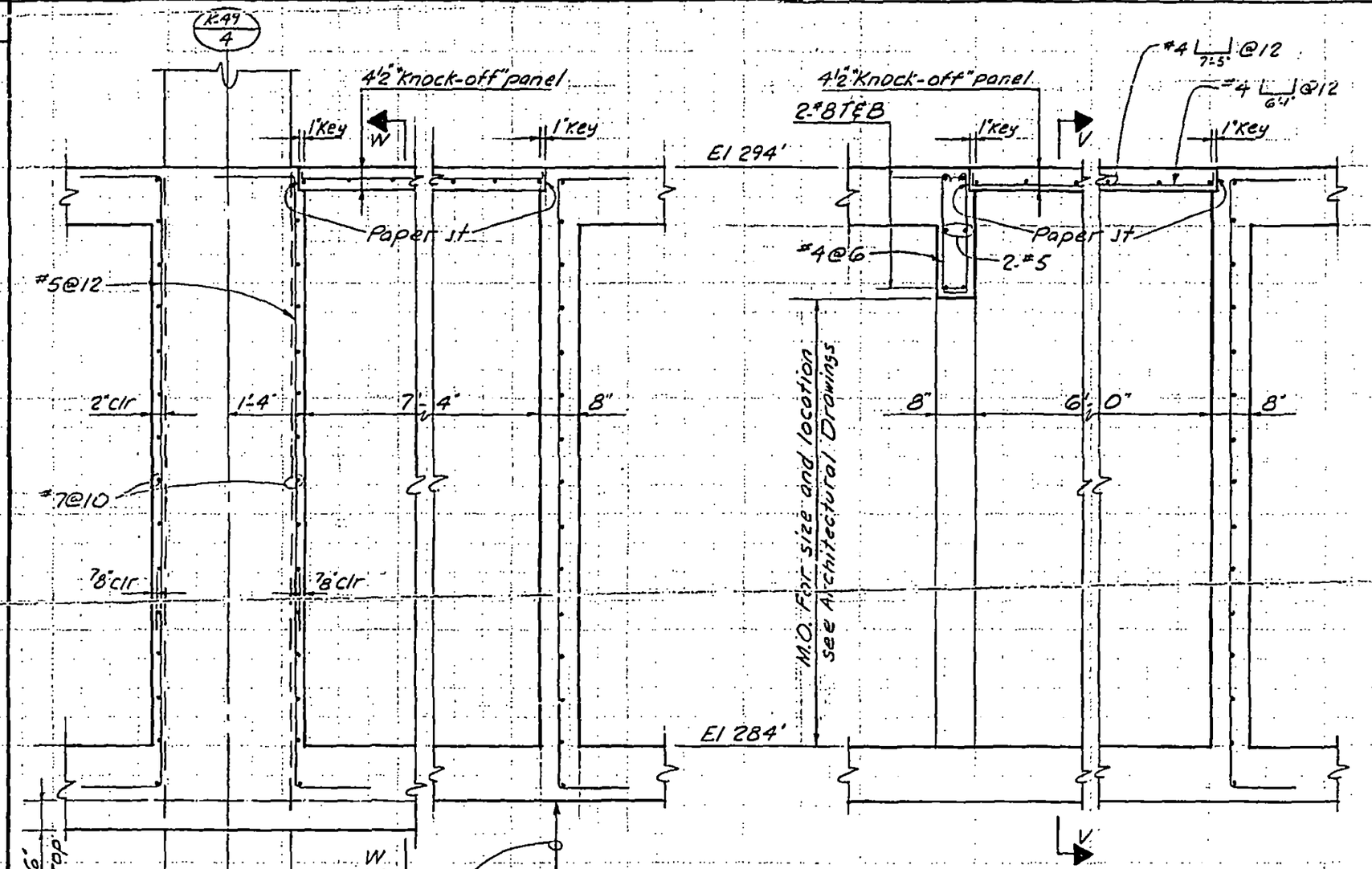

SECTION V-V

SECTION W-W

Notes:

1. Verify size and location of elevator bumper beams.
2. See 8-JK6-2 for wall reinforcement and details not shown.
3. See elevator shop drawings for inserts, etc.

LICENSED PROFESSIONAL ENGINEER — LESLIE E. ROBERTSON — No. 34360 — UNIVERSITY OF THE STATE OF NEW YORK

DESIGNED

DRAWN A.F.

REVIEWED

½" = 1'-0"

8-JK8-47.16

SKILLING, HELLE, CHRISTIANSEN, ROBERTSON — Structural & Civil Engineers

PROJECT THE WORLD TRADE CENTER | TITLE SECTIONS | DATE 12-18-68

REVISIONS
3-7-69
4-21-69

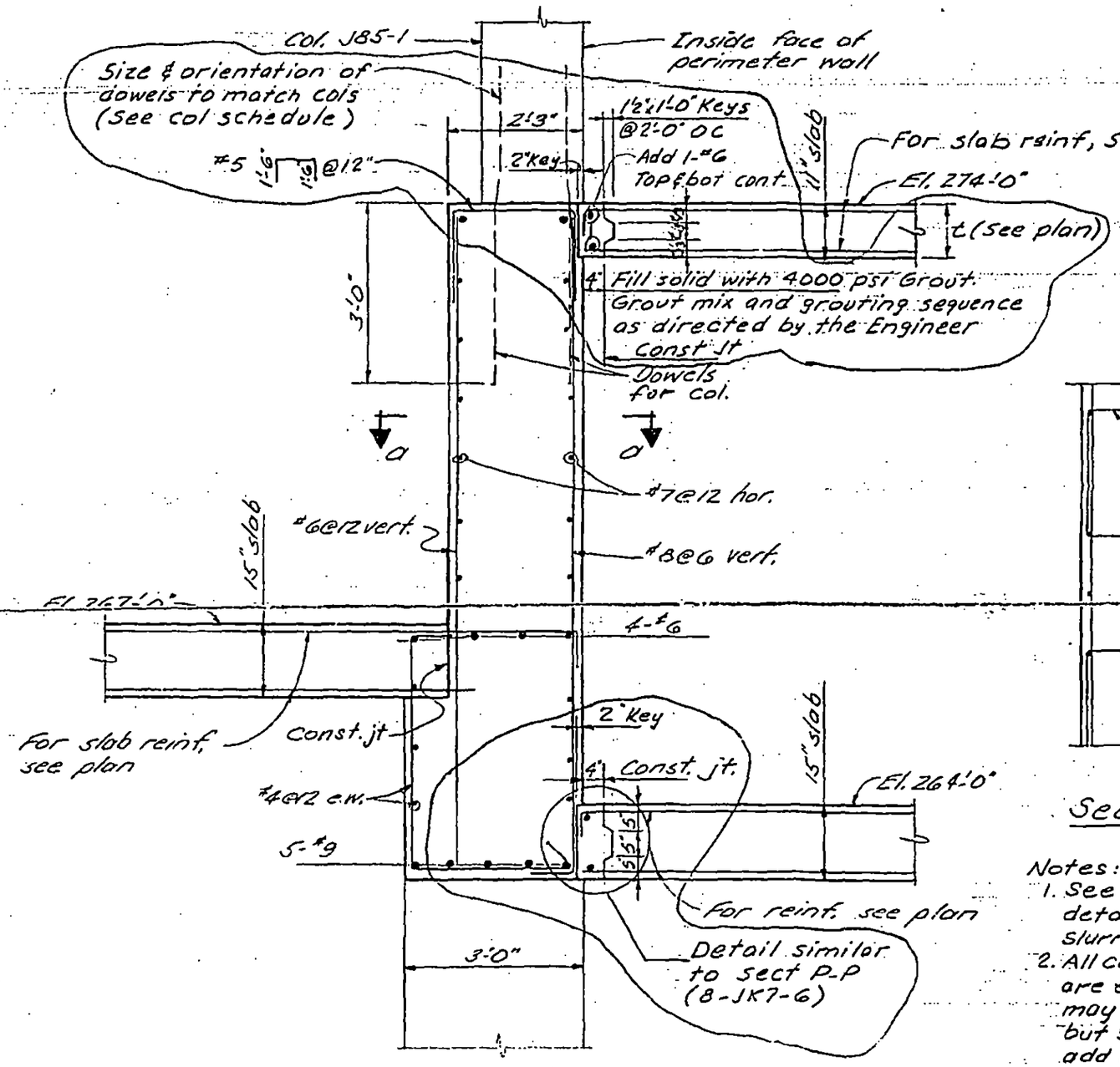

Section A-A

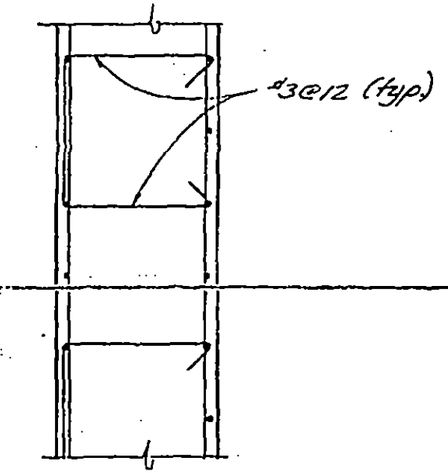

Section a-a

Notes:
1. See B-JK6-2.3 for conn. detail between C.I.P. wall & slurry wall.
2. All construction joints shown are essential. Contractor may omit any one of them, but shall not relocate or add any joint without the approval of the Engineer.

LICENSED PROFESSIONAL ENGINEER
LESLIE E. ROBERTSON
No. 34360
UNIVERSITY OF THE STATE OF NEW YORK

DESIGNED
DRAWN S.C.
REVIEWED J.M. & E.L.

8-JK8-48.1

SKILLING, HELLE, CHRISTIANSEN, ROBERTSON — Structural & Civil Engineers

PROJECT: THE WORLD TRADE CENTER | TITLE: SECTIONS | DATE: 12-18-68

REVISIONS

3-7-69

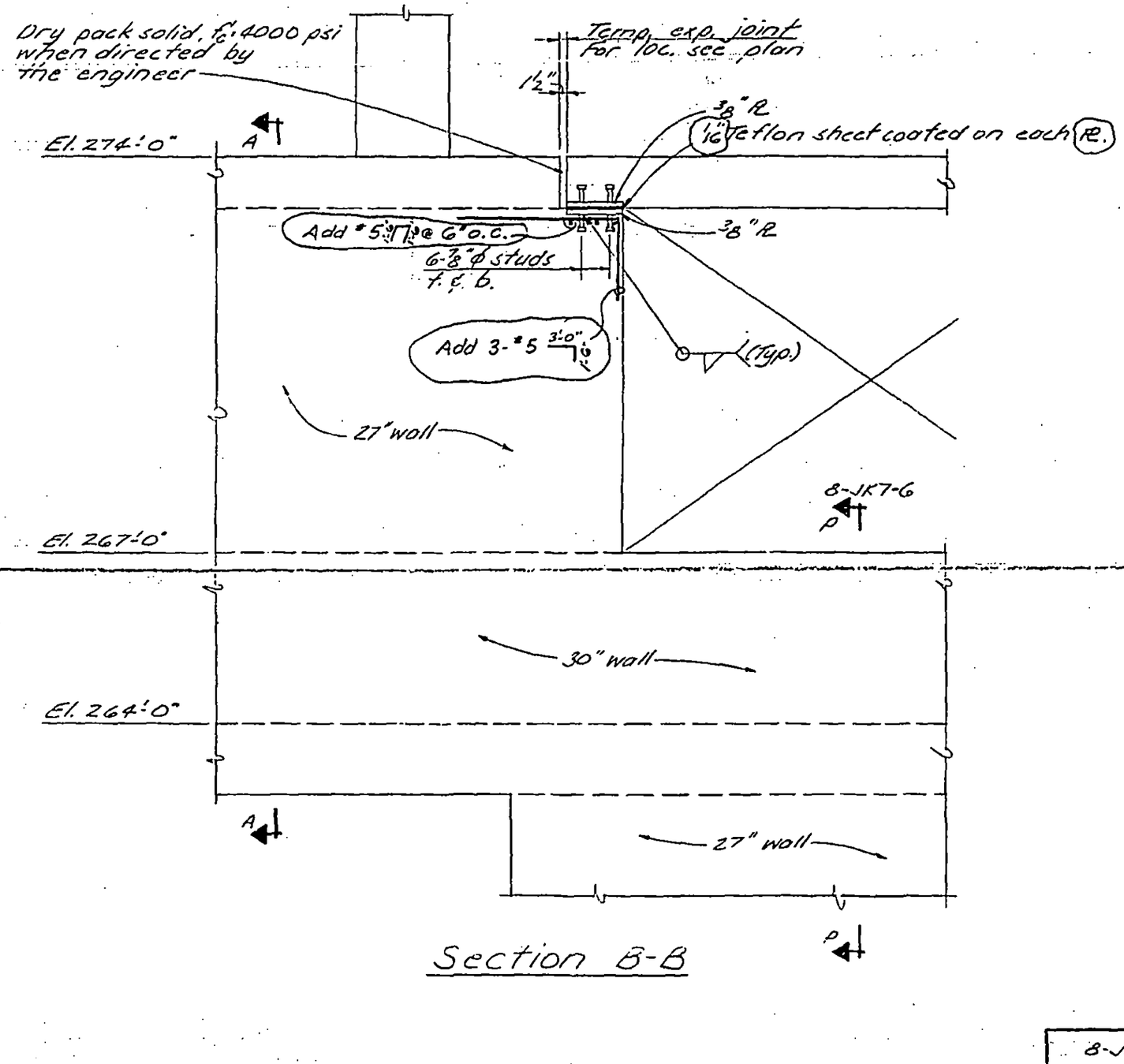

Section B-B

LICENSED PROFESSIONAL ENGINEER
LESLIE E. ROBERTSON
No. 34360
UNIVERSITY OF THE STATE OF NEW YORK

DESIGNED

DRAWN S.C.

REVIEWED J.M. & E.L.

8-JKB-48.2

SKILLING, HELLE, CHRISTIANSEN, ROBERTSON — Structural & Civil Engineers

PROJECT: THE WORLD TRADE CENTER | TITLE: SECTION | DATE: 12-18-68

REVISIONS

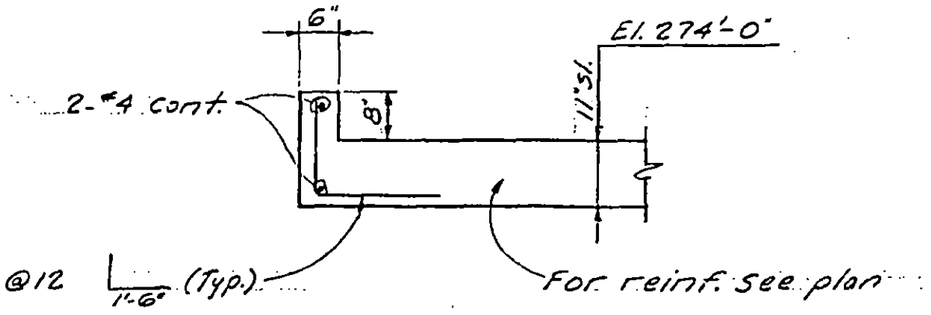

Section C-C

LICENSED PROFESSIONAL ENGINEER
LESLIE E. ROBERTSON
No. 34360
UNIVERSITY OF THE STATE OF NEW YORK

DESIGNED

DRAWN
S.C.

REVIEWED
J.M. & E.L.

8-JK8-48.3

SKILLING, HELLE, CHRISTIANSEN, ROBERTSON — Structural & Civil Engineers

PROJECT THE WORLD TRADE CENTER | TITLE SECTIONS | DATE 12-18-68

REVISIONS

5-16-69 GEN. REV.

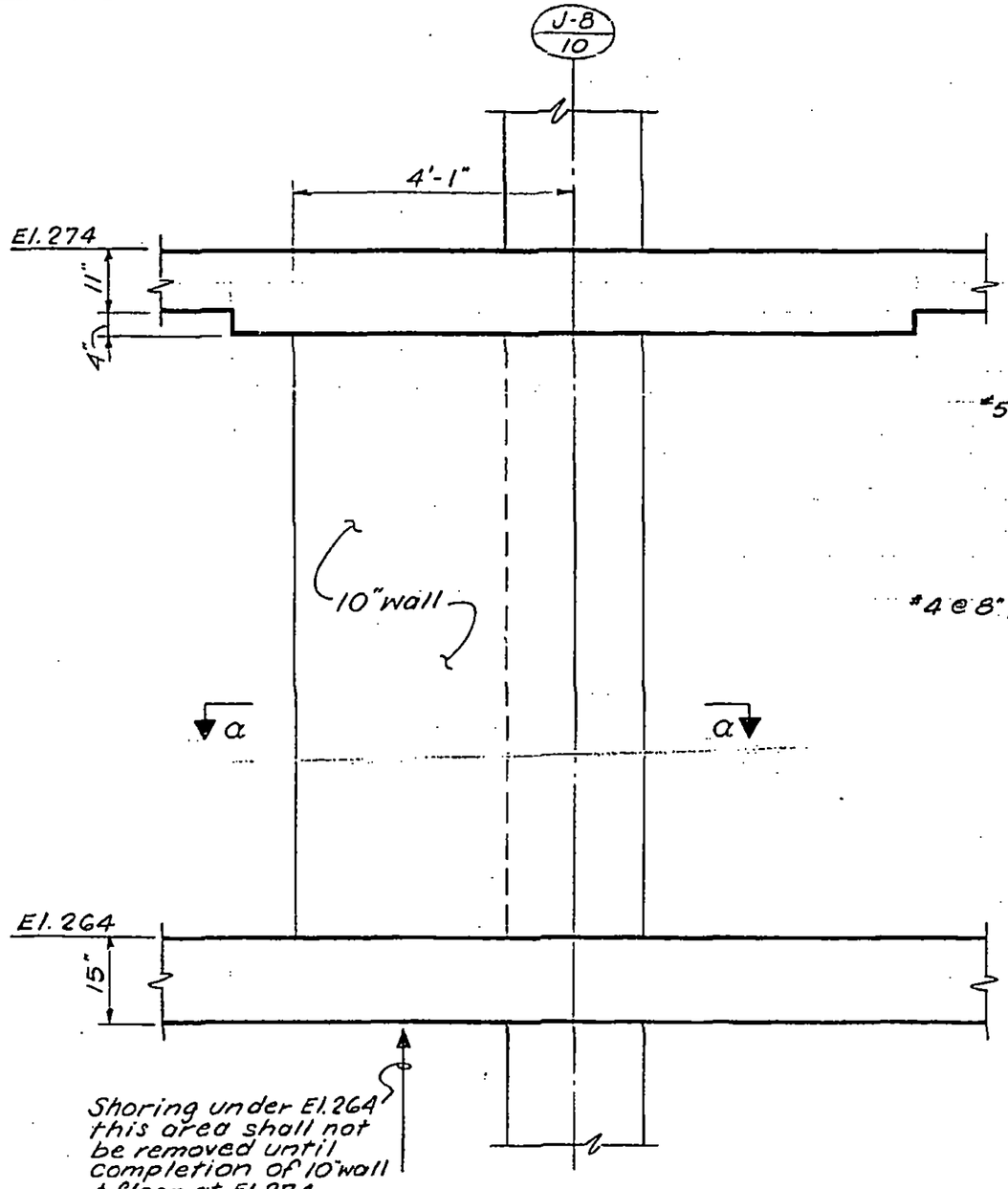

Section D-D

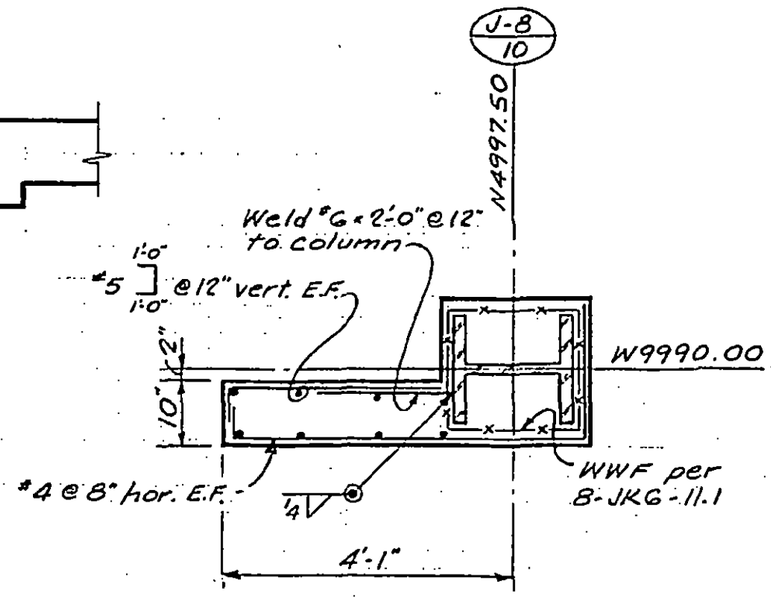

Section a-a

LICENSED PROFESSIONAL ENGINEER
LESLIE E. ROBERTSON
No. 34360
UNIVERSITY OF THE STATE OF NEW YORK

DESIGNED

DRAWN S.C.

REVIEWED E.L.

8-JK8-48.4

SKILLING, HELLE, CHRISTIANSEN, ROBERTSON — Structural & Civil Engineers

PROJECT THE WORLD TRADE CENTER | TITLE SECTIONS | DATE 1-31-69

REVISIONS

4-21-69

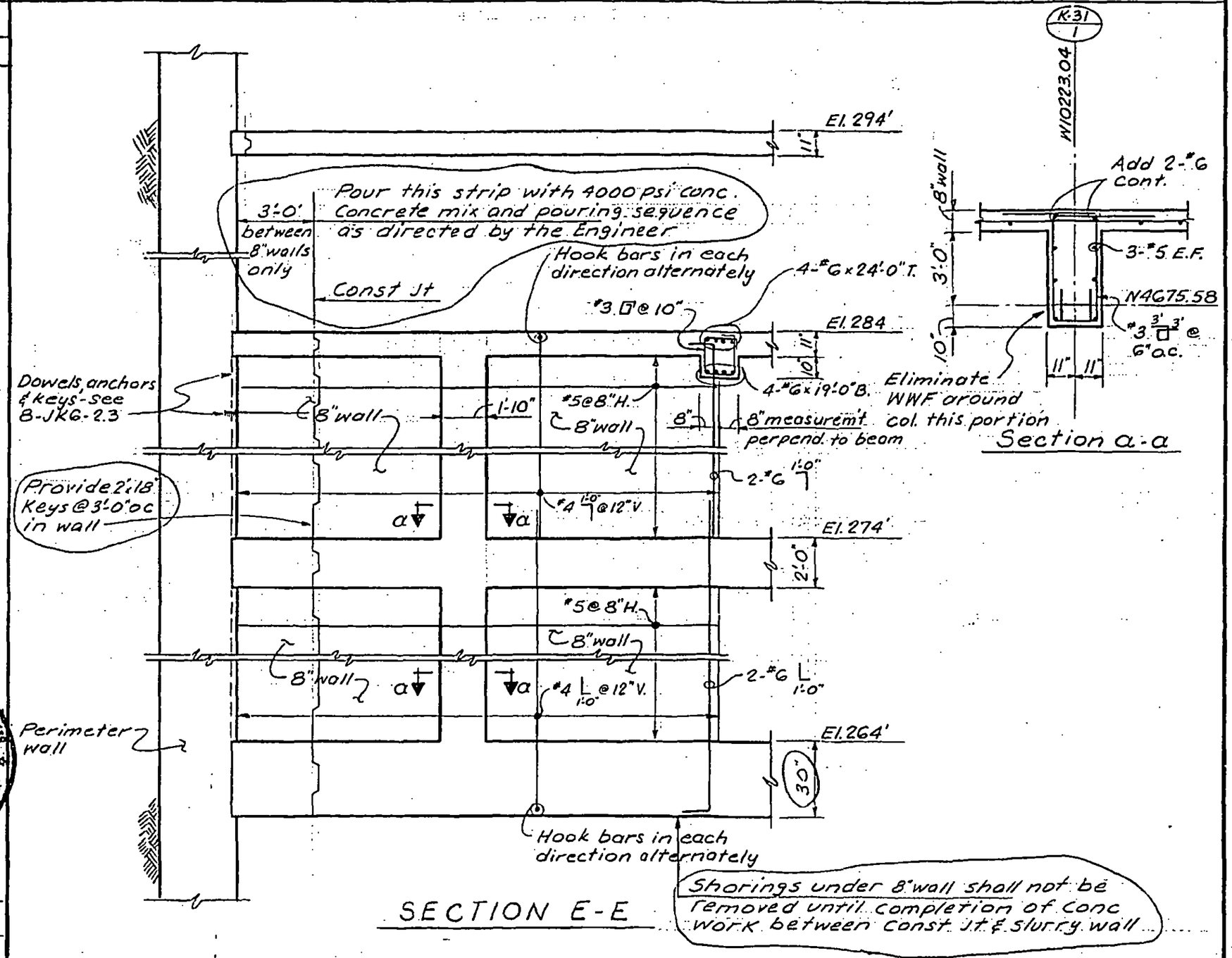

LICENSED PROFESSIONAL ENGINEER — LESLIE E. ROBERTSON — No. 34360 — UNIVERSITY OF THE STATE OF NEW YORK

DESIGNED

DRAWN S.C.

REVIEWED E.L.

8-JK8-48.5

SKILLING, HELLE, CHRISTIANSEN, ROBERTSON — Structural & Civil Engineers

PROJECT: THE WORLD TRADE CENTER | TITLE: SECTIONS | DATE: 1-31-69

REVISIONS
2-20-69
4-9-69
4-21-69

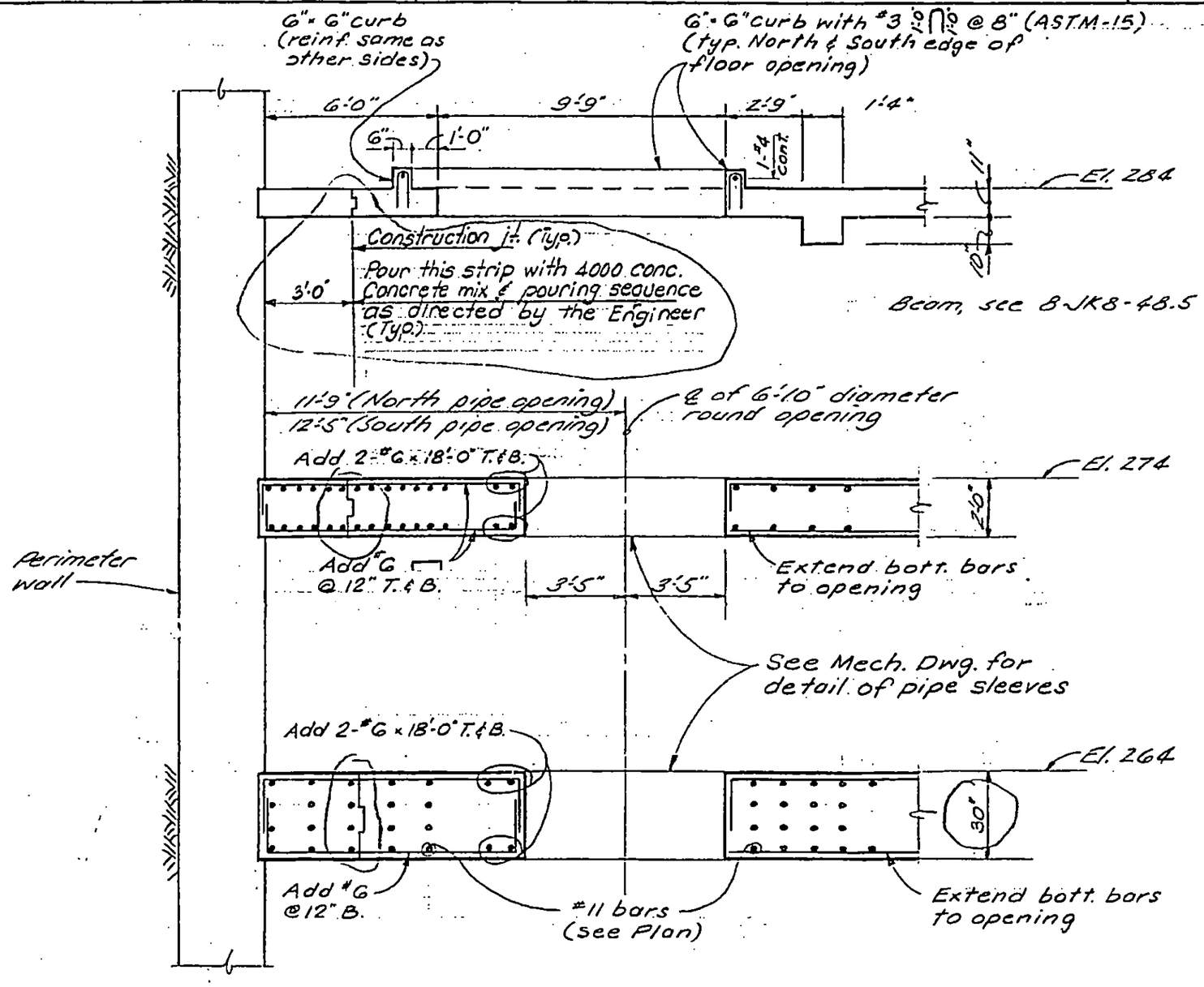

Section F-F

LICENSED PROFESSIONAL ENGINEER — LESLIE E. ROBERTSON — No. 34360 — UNIVERSITY OF THE STATE OF NEW YORK

DESIGNED
DRAWN J. Adams
REVIEWED E.L.

8-JK8-48.6

SKILLING, HELLE, CHRISTIANSEN, ROBERTSON — Structural & Civil Engineers

PROJECT: THE WORLD TRADE CENTER | TITLE: SECTIONS | DATE: 1-31-69

REVISIONS
4-21-69
11/26/71
12/28/71

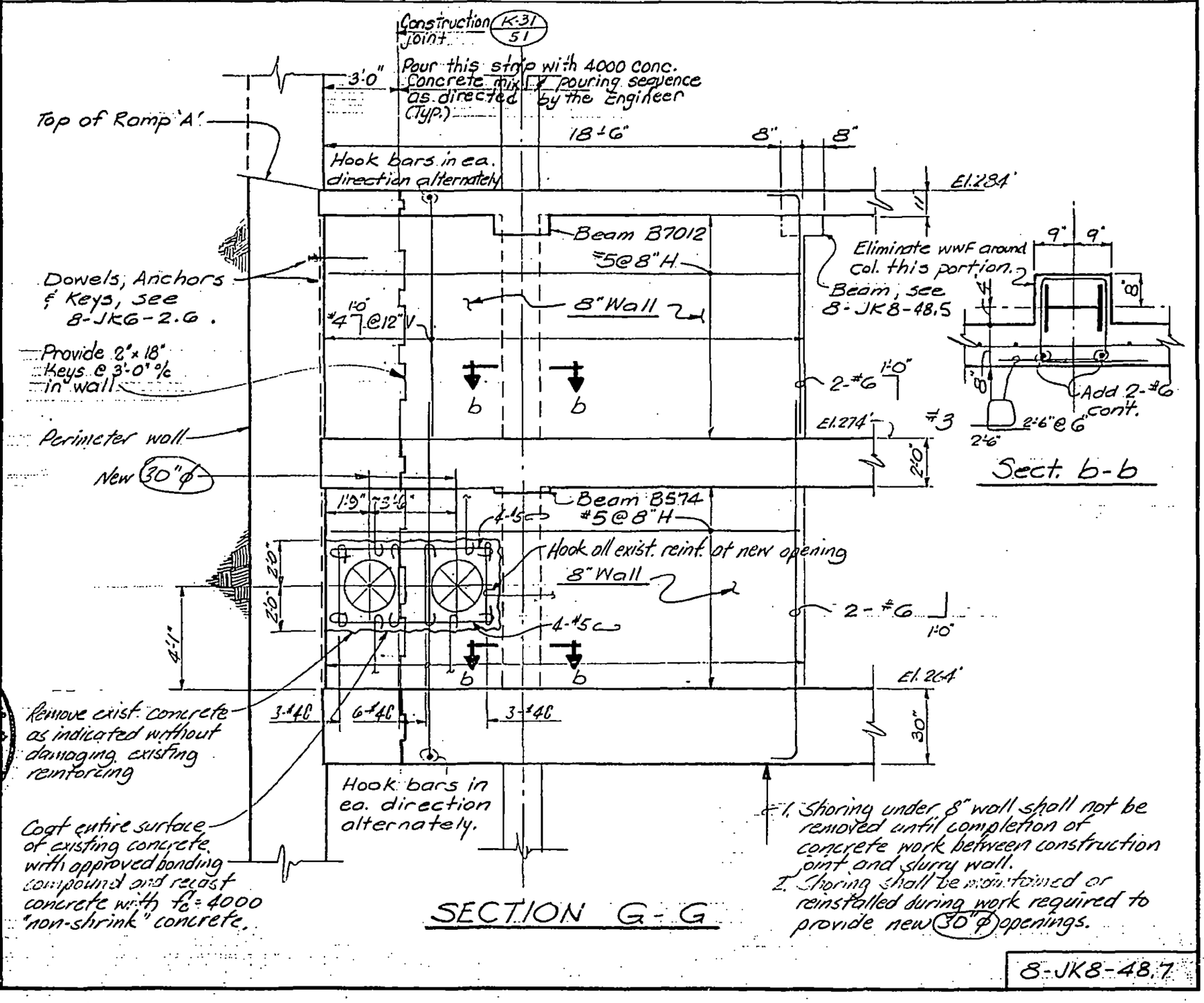

SECTION G-G

LICENSED PROFESSIONAL ENGINEER — LESLIE E. ROBERTSON — No. 34960 — UNIVERSITY OF THE STATE OF NEW YORK

DESIGNED
DRAWN G.S.
REVIEWED E.L.

8-JK8-48.7

SKILLING, HELLE, CHRISTIANSEN, ROBERTSON — Structural & Civil Engineers

PROJECT: THE WORLD TRADE CENTER | TITLE: SECTIONS | DATE: 1-31-69

REVISIONS

1-15-72

3-15-73

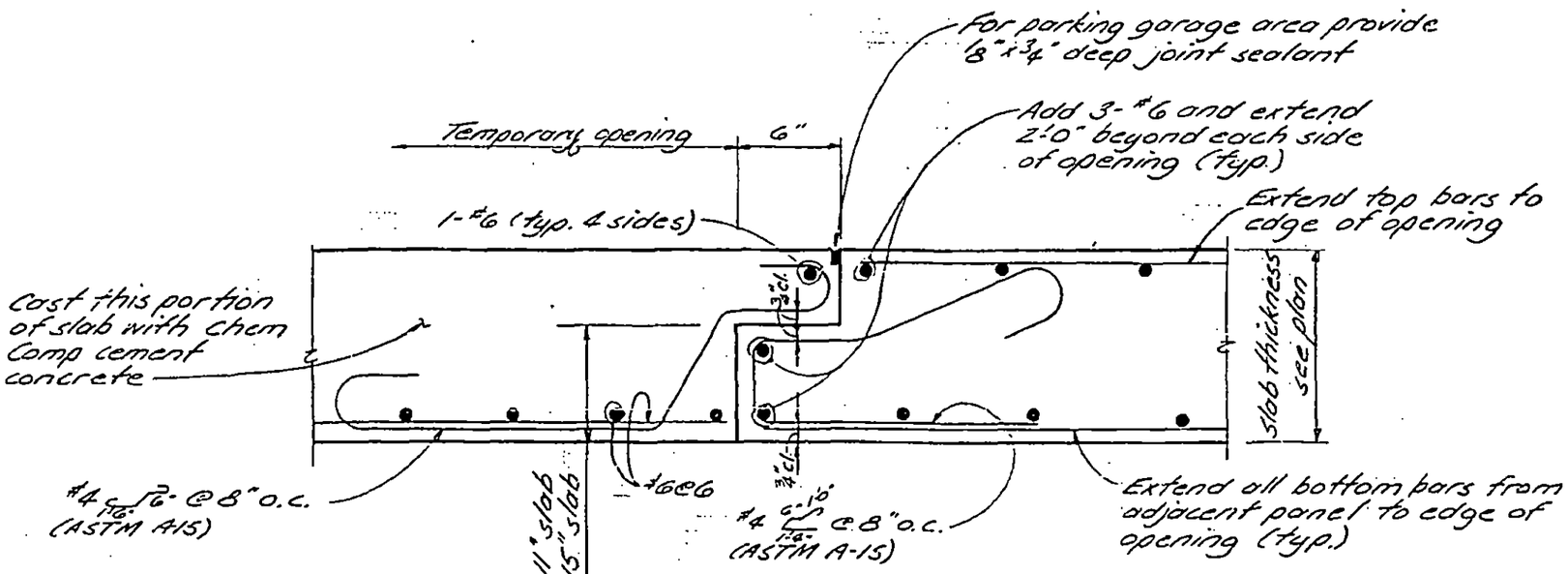

Section H-H

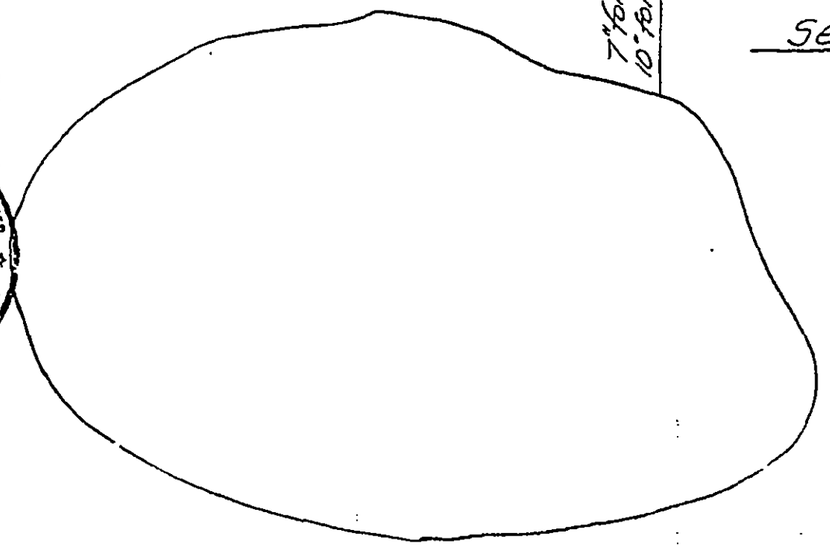

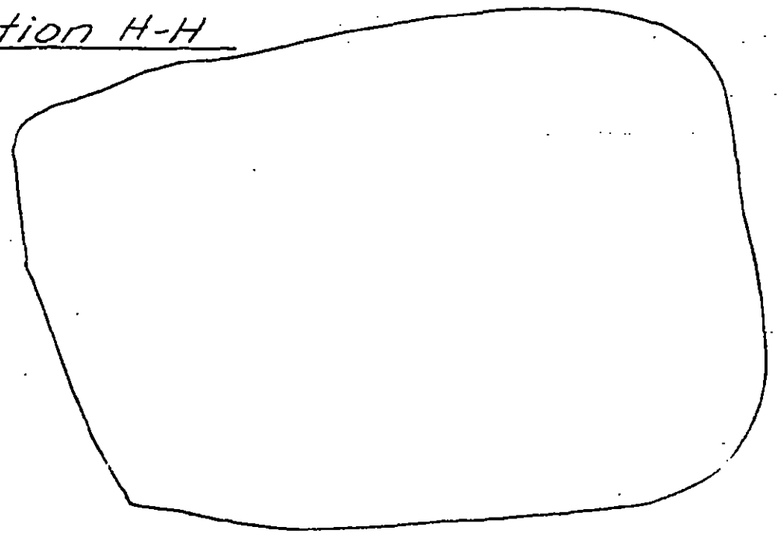

LICENSED PROFESSIONAL ENGINEER — LESLIE E. ROBERTSON — No. 34360 — UNIVERSITY OF THE STATE OF NEW YORK

DESIGNED

DRAWN J. Adams

REVIEWED E.L.

C-JKB-48.6

SKILLING, HELLE, CHRISTIANSEN, ROBERTSON — Structural & Civil Engineers

PROJECT: THE WORLD TRADE CENTER | TITLE: SECTION | DATE: 2-6-69

REVISIONS

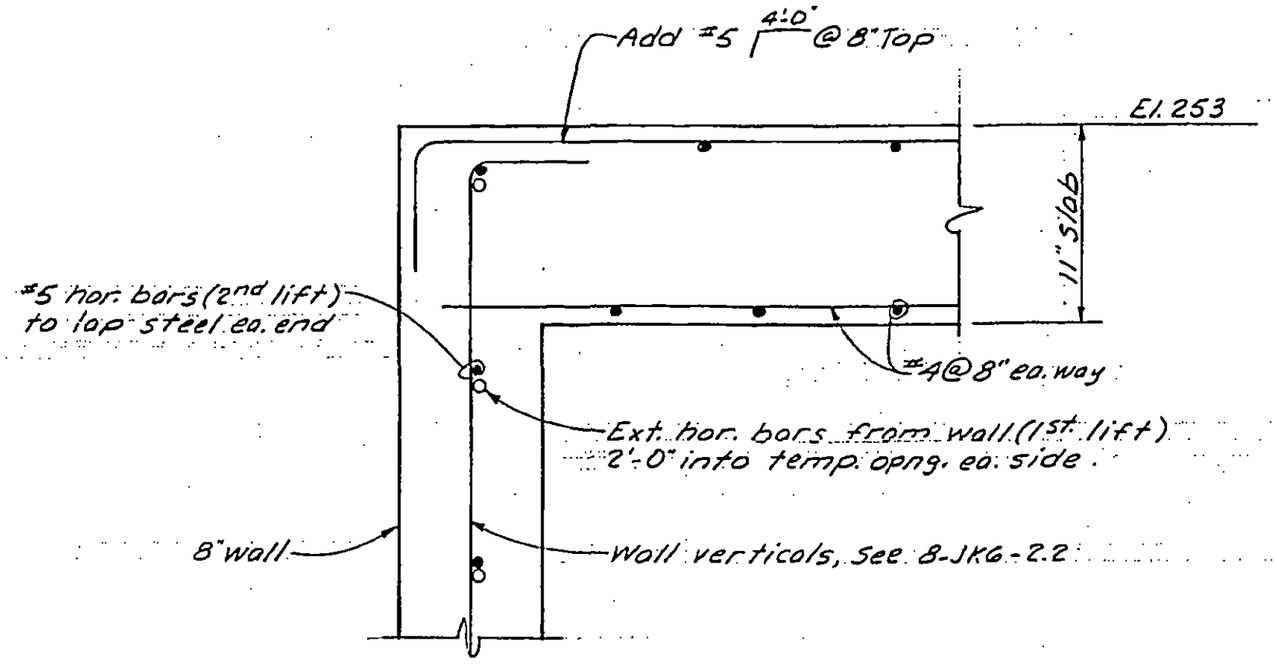

Section J-J

Notes:

1. Cost this portion of slab & wall (within temporary opng.) with Chem. comp. cement concrete.

LICENSED PROFESSIONAL ENGINEER — LESLIE E. ROBERTSON — No. 34360 — UNIVERSITY OF THE STATE OF NEW YORK

2-4-69
DESIGNED

DRAWN
A.L.F.

REVIEWED
E.L.

8-JK8-48.9

SKILLING, HELLE, CHRISTIANSEN, ROBERTSON — Structural & Civil Engineers

PROJECT: THE WORLD TRADE CENTER | TITLE: SECTIONS | DATE: 7-14-69

REVISIONS

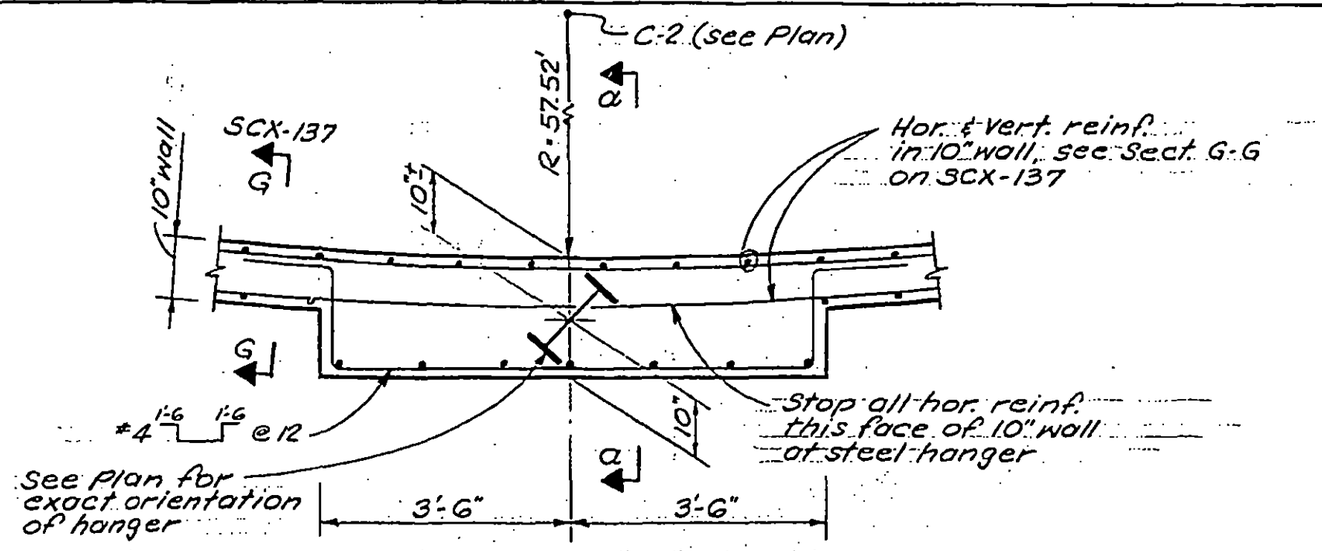

Detail - 1

Detail - 2

(½"=1'-0")

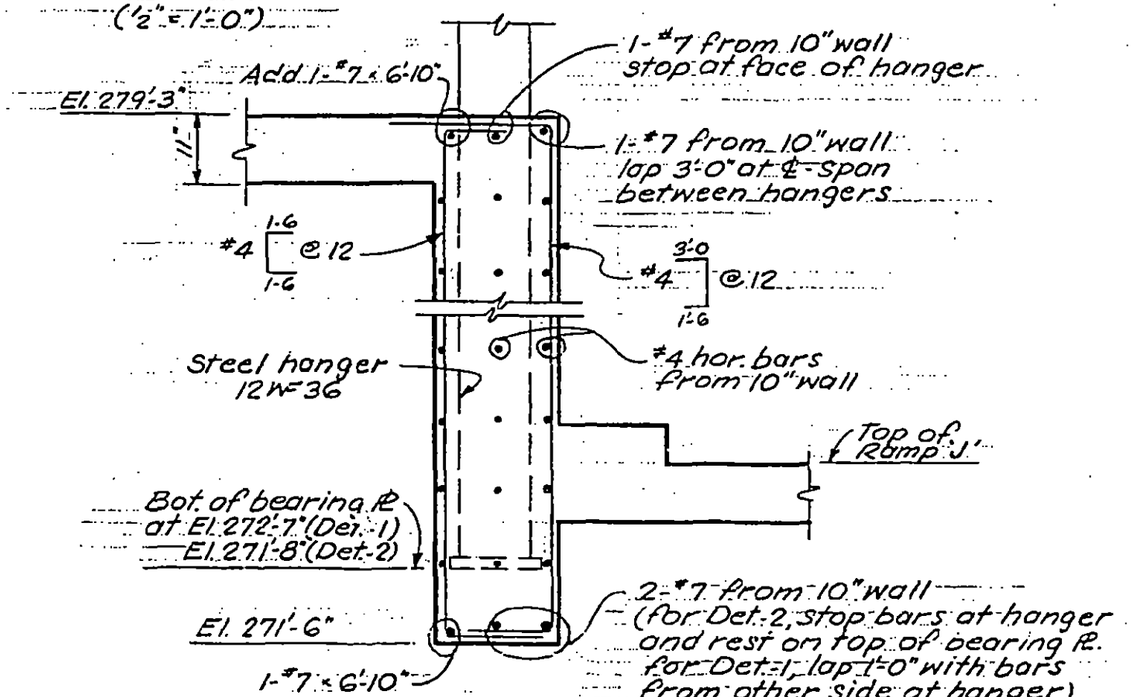

Section a-a

(½"=1'-0")

LICENSED PROFESSIONAL ENGINEER — LESLIE E. ROBERTSON — No. 34360 — UNIVERSITY OF THE STATE OF NEW YORK

DESIGNED

DRAWN S.C.

REVIEWED E.L.

8-JK8-48.10

SKILLING, HELLE, CHRISTIANSEN, ROBERTSON — Structural & Civil Engineers

PROJECT THE WORLD TRADE CENTER | TITLE SECTIONS | DATE 7-14-69

REVISIONS
4-28-70

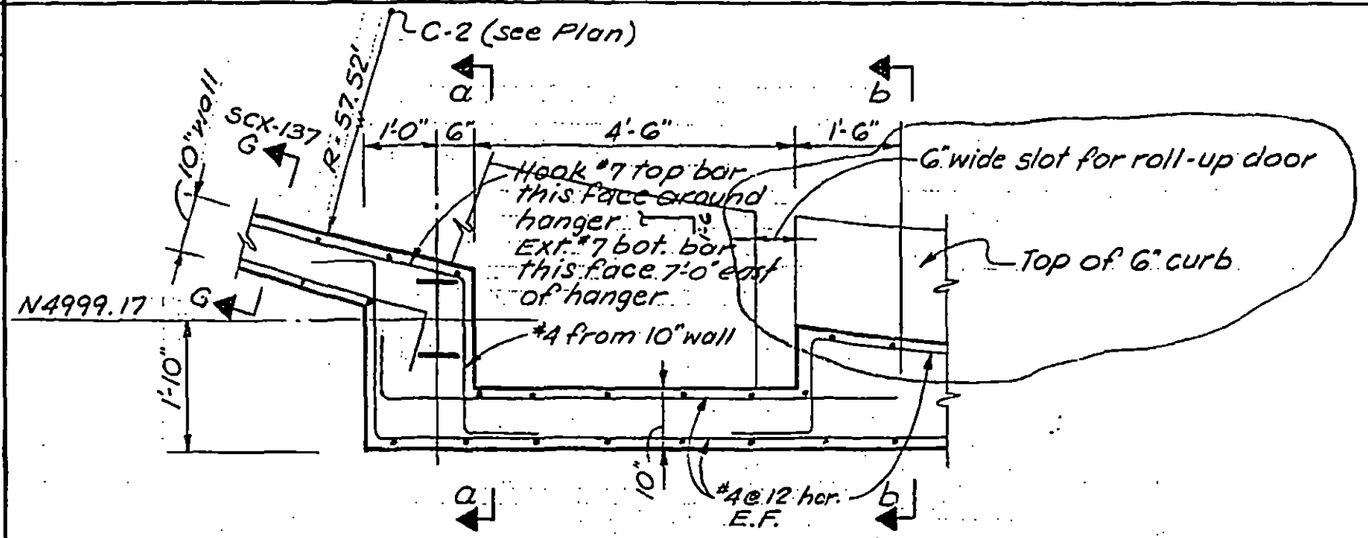

Detail-3
(½" = 1'-0")

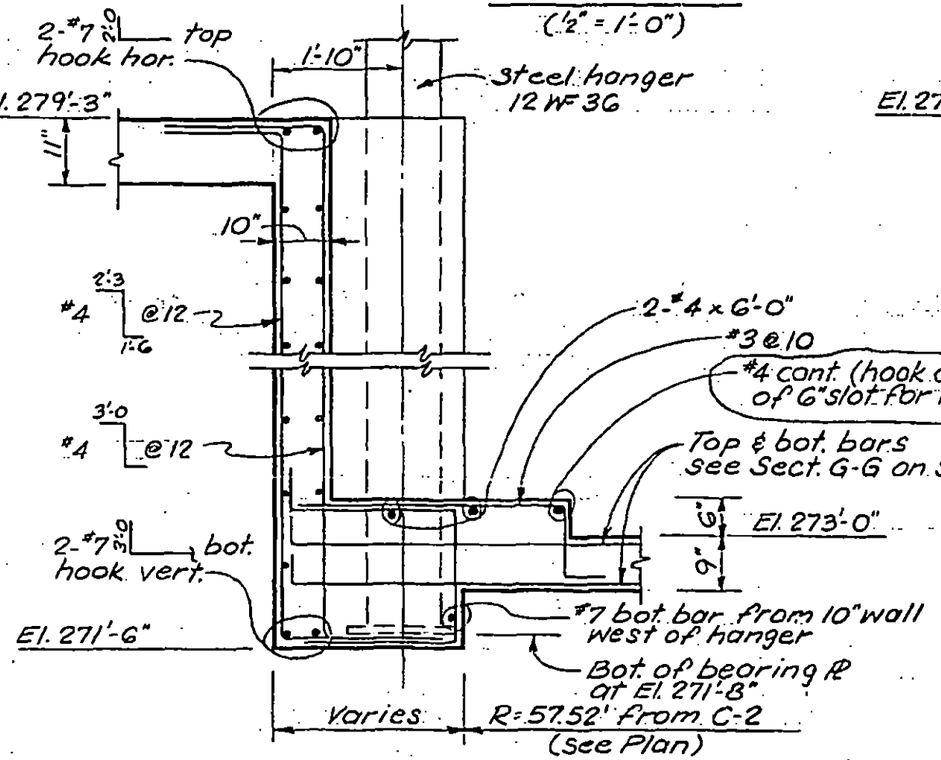

Section a-a
(½" = 1'-0")

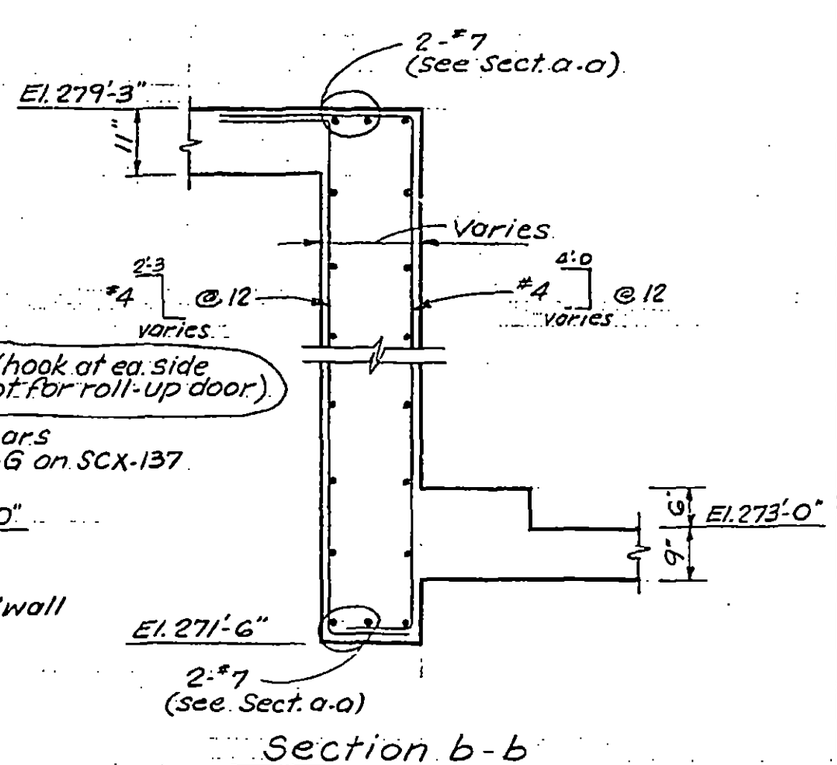

Section b-b
(½" = 1'-0")

LICENSED PROFESSIONAL ENGINEER
LESLIE E. ROBERTSON
No. 34360
UNIVERSITY OF THE STATE OF NEW YORK

DESIGNED
DRAWN S.C.
REVIEWED E.L.

8-JK8-48.11

SKILLING, HELLE, CHRISTIANSEN, ROBERTSON — Structural & Civil Engineers

PROJECT: THE WORLD TRADE CENTER | TITLE: SECTIONS | DATE: 7-14-69

REVISIONS

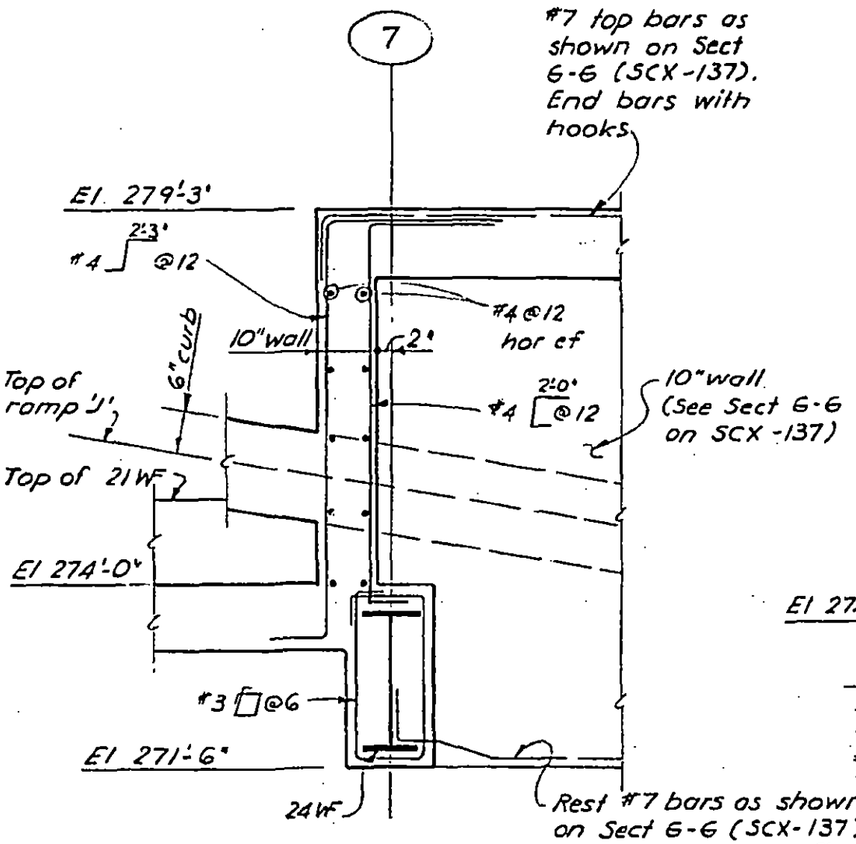

Section K-K
(½" = 1'-0")

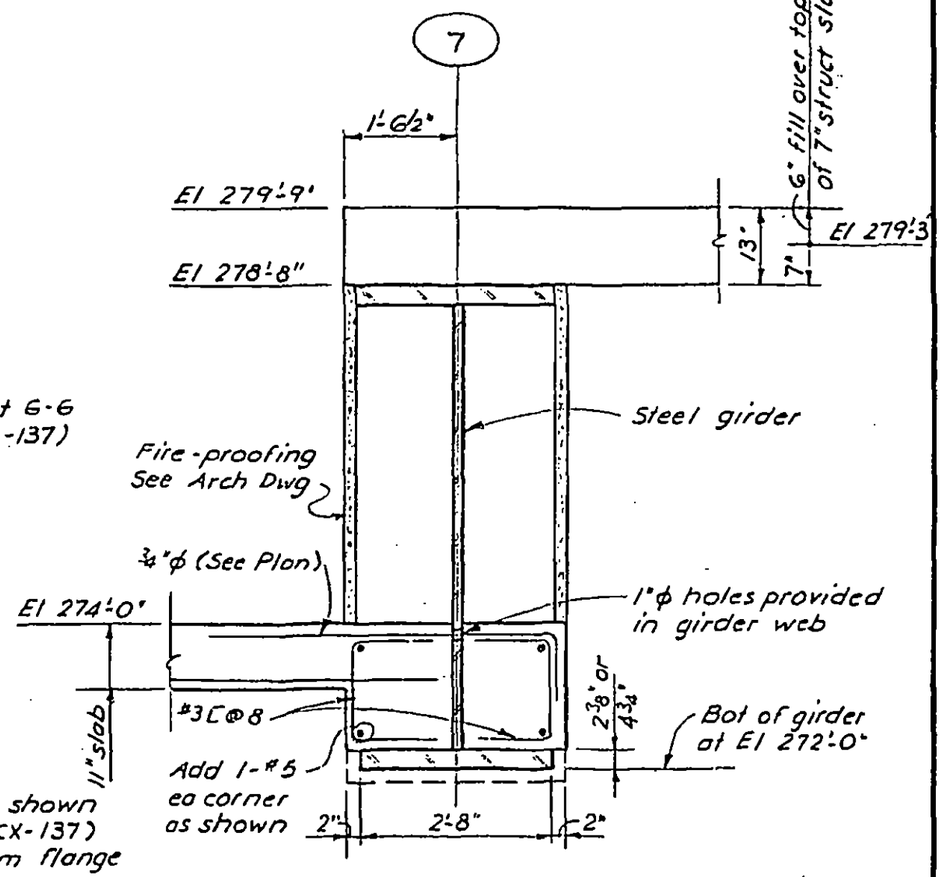

Section L-L
(½" = 1'-0")

LICENSED PROFESSIONAL ENGINEER ★ LESLIE E. ROBERTSON ★ No. 34360 ★ UNIVERSITY OF THE STATE OF NEW YORK

DESIGNED

DRAWN: F. Smith

REVIEWED: E.L.

8-JK8-48.12

SKILLING, HELLE, CHRISTIANSEN, ROBERTSON — Structural & Civil Engineers

PROJECT THE WORLD TRADE CENTER | TITLE SECTIONS | DATE 11-25-69

REVISIONS

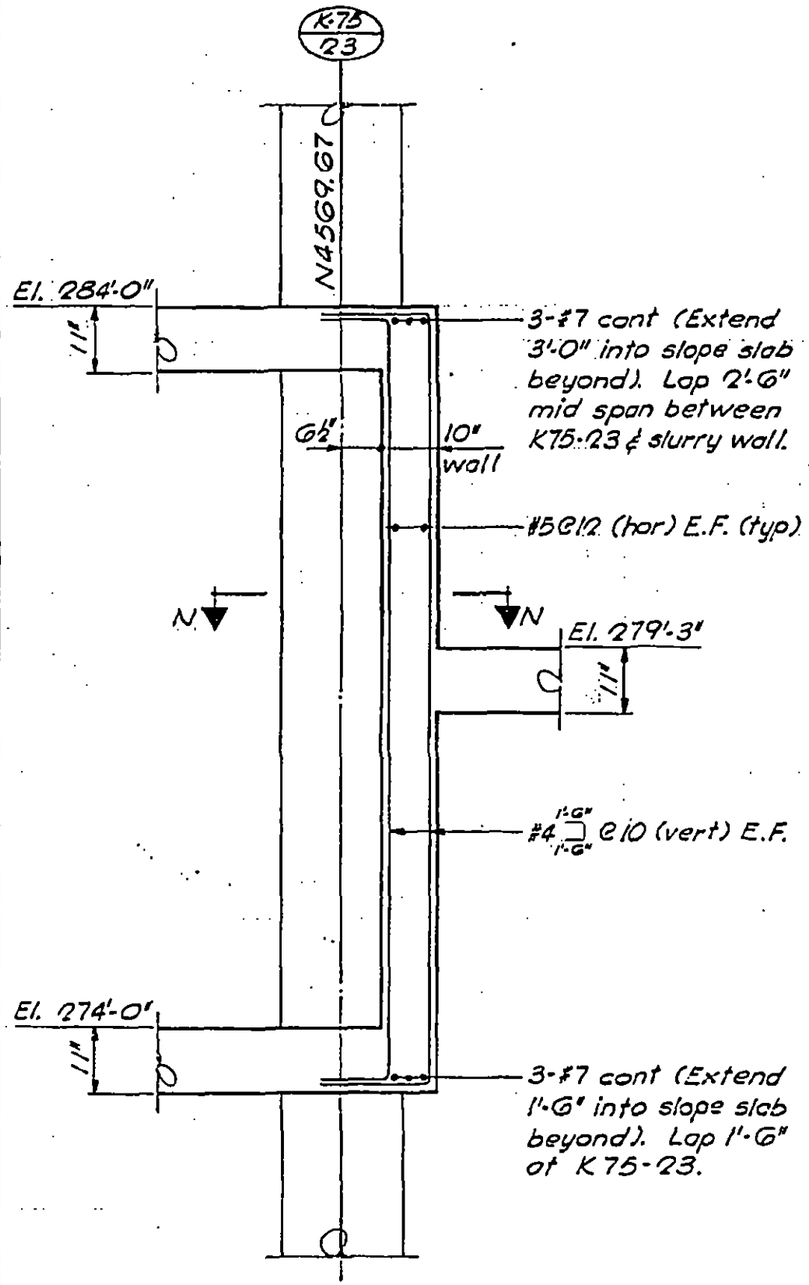

SECTION M-M
(½"=1'-0")

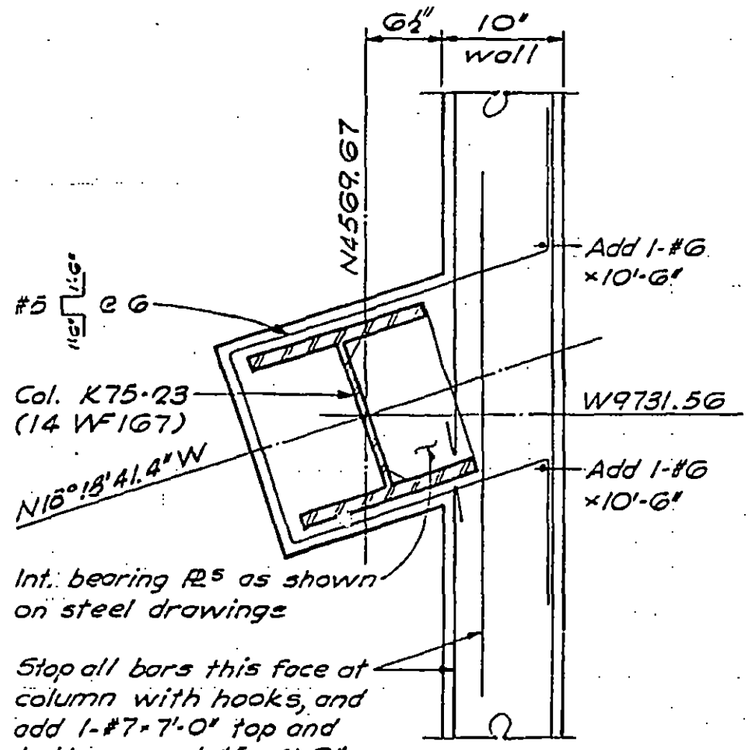

SECTION N-N
(1"=1'-0"

LICENSED PROFESSIONAL ENGINEER LESLIE E. ROBERTSON No. 34360 UNIVERSITY OF THE STATE OF NEW YORK

DESIGNED

DRAWN G.K.

REVIEWED E.L.

8-JK8-48.13

SKILLING, HELLE, CHRISTIANSEN, ROBERTSON — Structural & Civil Engineers

PROJECT THE WORLD TRADE CENTER | TITLE SECTIONS | DATE 11-25-69

REVISIONS

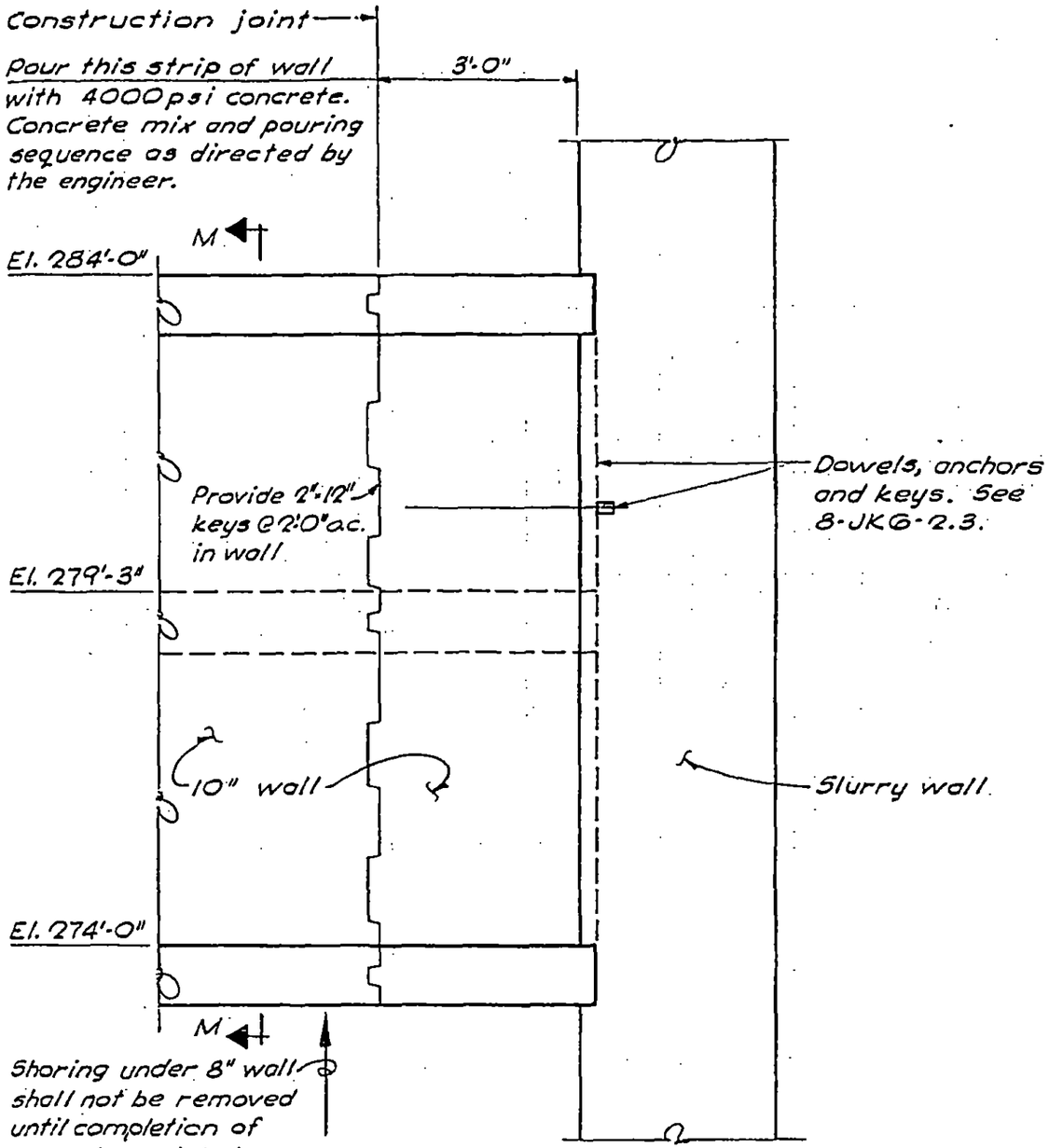

SECTION P-P

(½"=1'-0")

LICENSED PROFESSIONAL ENGINEER LESLIE E. ROBERTSON No. 34380 UNIVERSITY OF THE STATE OF NEW YORK

DESIGNED

DRAWN G.K.

REVIEWED E.L.

8-JK8-48.14

SKILLING, HELLE, CHRISTIANSEN, ROBERTSON — Structural & Civil Engineers

PROJECT: THE WORLD TRADE CENTER | TITLE: SECTIONS | DATE: 1-16-70

REVISIONS
4-28-70
10-29-71

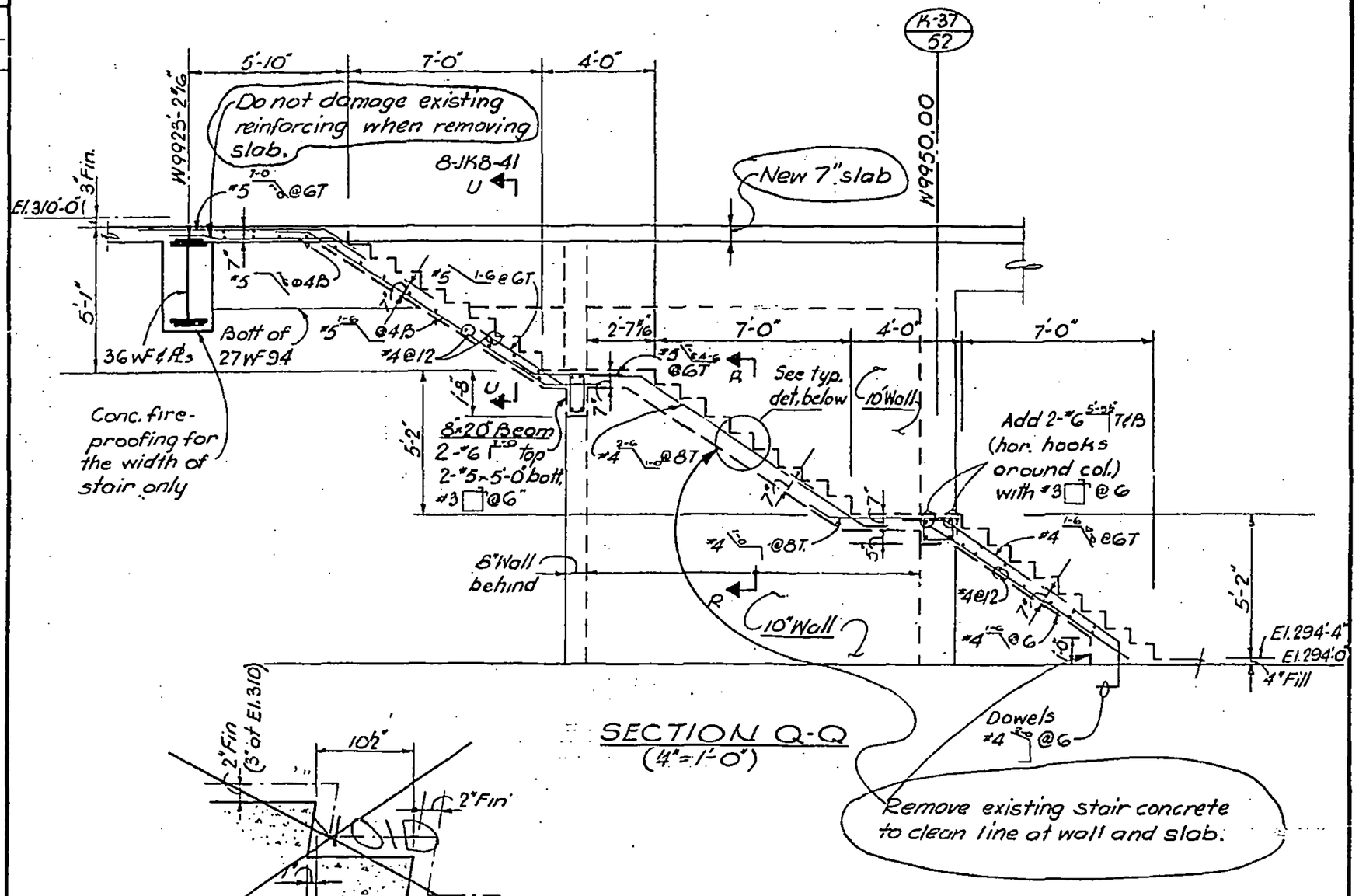

SECTION Q-Q
(4"=1'-0")

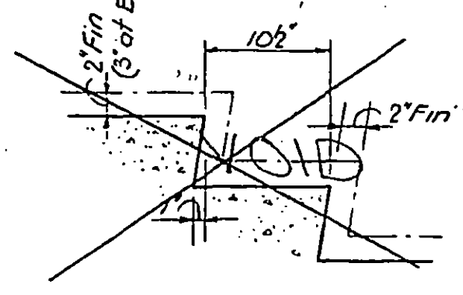

TYPICAL DETAIL OF STEPS

LICENSED PROFESSIONAL ENGINEER
LESLIE E. ROBERTSON
No 34360
UNIVERSITY OF THE STATE OF NEW YORK

DESIGNED
DRAWN: D. C. Huggins
REVIEWED: E.L.

8-JK8-48.15

SKILLING, HELLE, CHRISTIANSEN, ROBERTSON — Structural & Civil Engineers

PROJECT THE WORLD TRADE CENTER | TITLE SECTIONS | DATE 1-16-70

REVISIONS

10-29-71

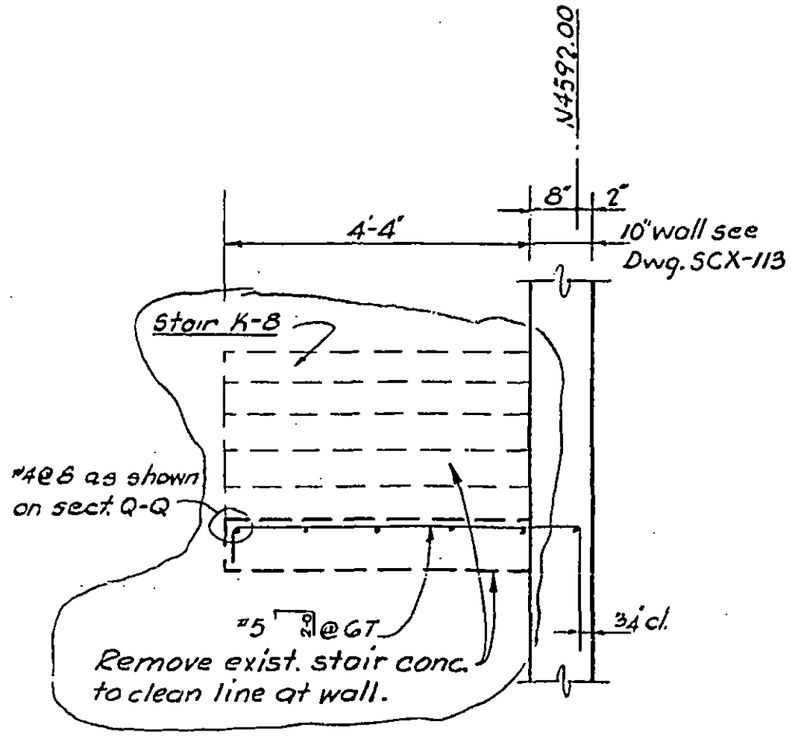

SECTION R-R
(2 - 1'-0")

LICENSED PROFESSIONAL ENGINEER LESLIE E. ROBERTSON No. 34360 UNIVERSITY OF THE STATE OF NEW YORK

DESIGNED

DRAWN D.C. Huggins

REVIEWED E.L.

S-1K8-48.16

SKILLING, HELLE, CHRISTIANSEN, ROBERTSON — Structural & Civil Engineers

PROJECT THE WORLD TRADE CENTER | TITLE SECTIONS AT EL.290'-0" | DATE 7-7-69

REVISIONS

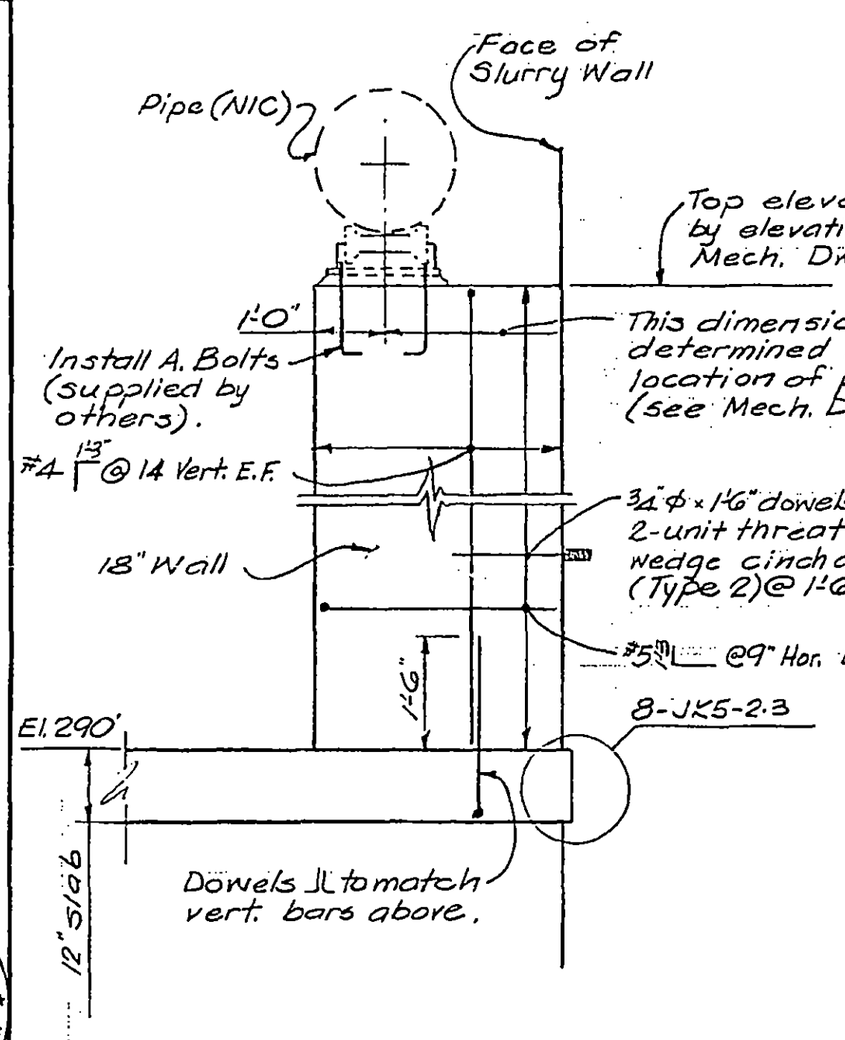

Section A-A
(1/2" = 1'-0")

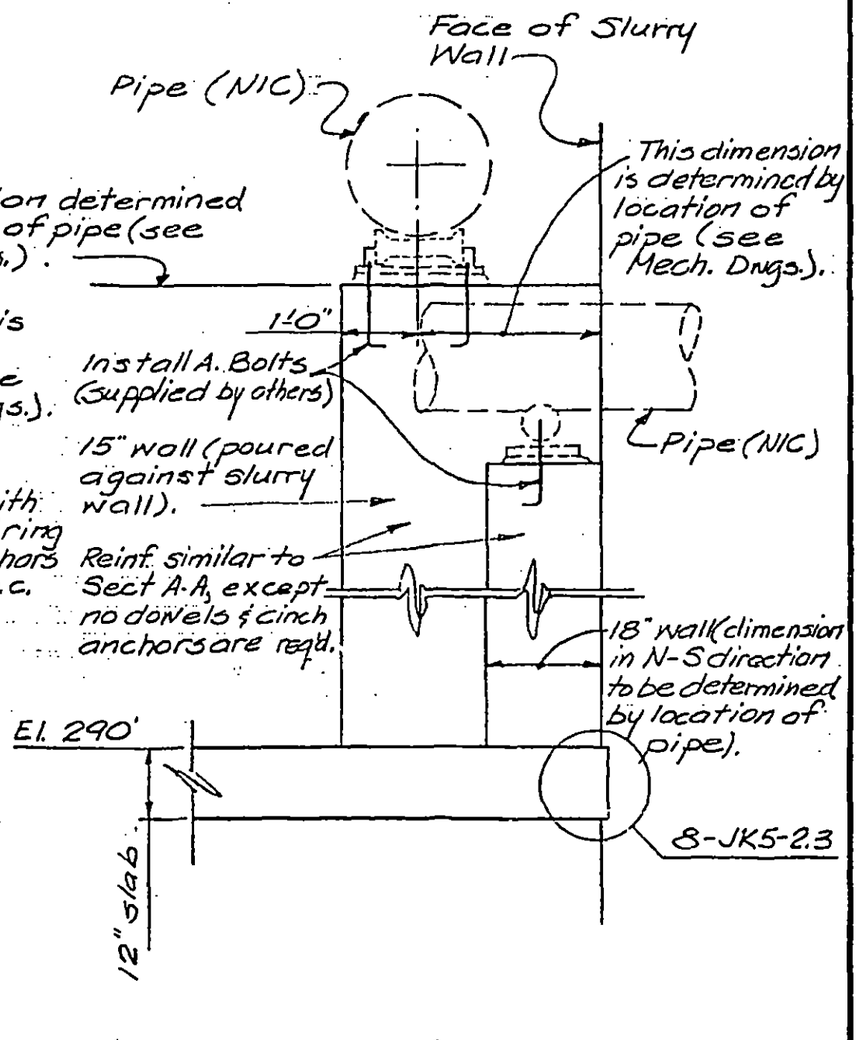

Section B-B
(1/2" = 1'-0")

LICENSED PROFESSIONAL ENGINEER — LESLIE F. ROBERTSON — No. 34360 — UNIVERSITY OF THE STATE OF NEW YORK

DESIGNED

DRAWN G.S.

REVIEWED E.L.

8-JK8-50.1

SKILLING, HELLE, CHRISTIANSEN, ROBERTSON — Structural & Civil Engineers

PROJECT THE WORLD TRADE CENTER | TITLE SECTIONS AT EL. 290'-0" | DATE 7-7-69

REVISIONS

8-8-69

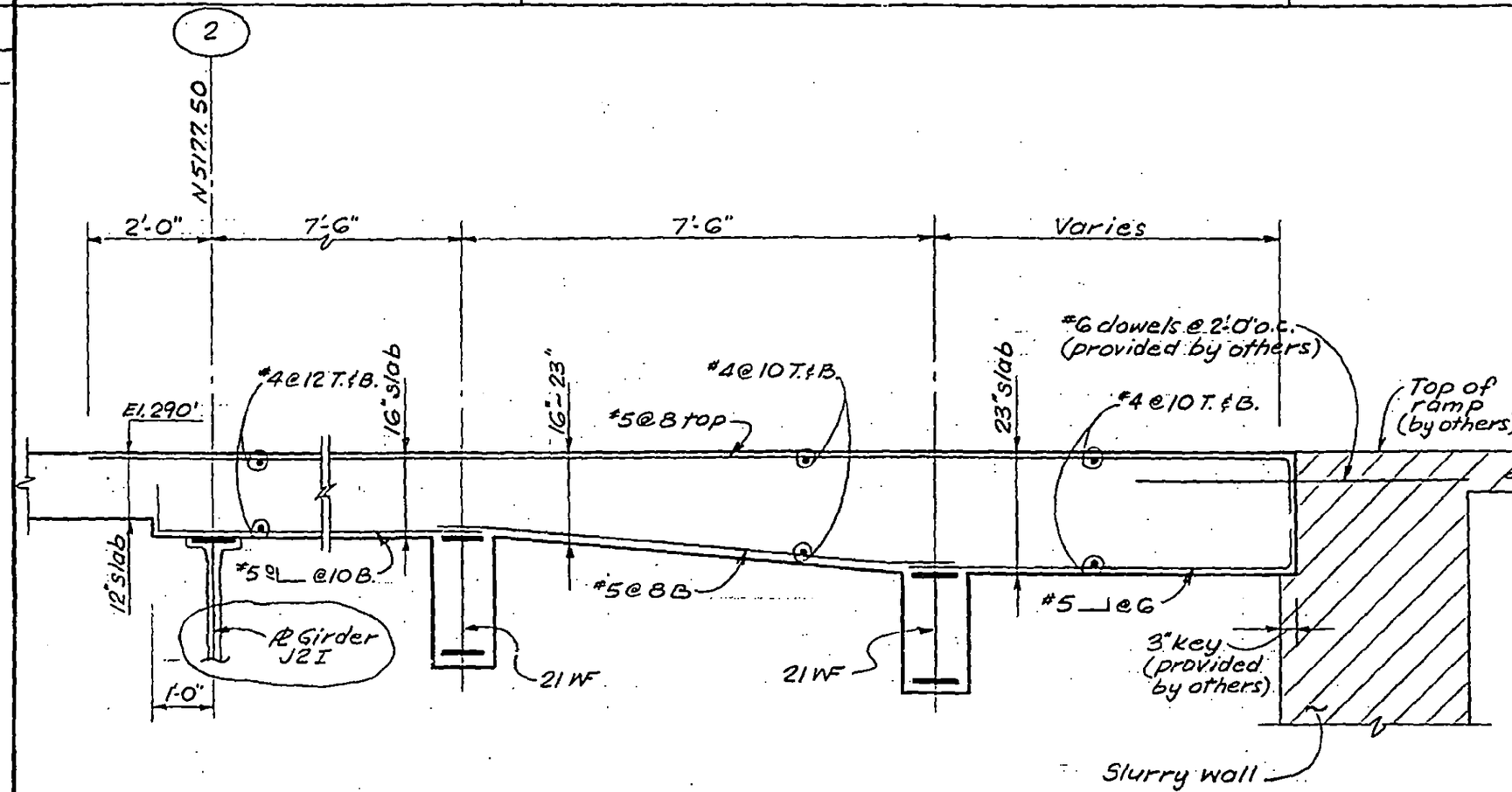

Section C-C

(½"=1'-0")

LICENSED PROFESSIONAL ENGINEER
LESLIE E. ROBERTSON
No. 34360
UNIVERSITY OF THE STATE OF NEW YORK

DESIGNED

DRAWN S.C.

REVIEWED

8-JK8-50.2

SKILLING, HELLE, CHRISTIANSEN, ROBERTSON — Structural & Civil Engineers

PROJECT: THE WORLD TRADE CENTER | TITLE: SECTION AT EL. 290'-0" | DATE: 9-26-69

REVISIONS

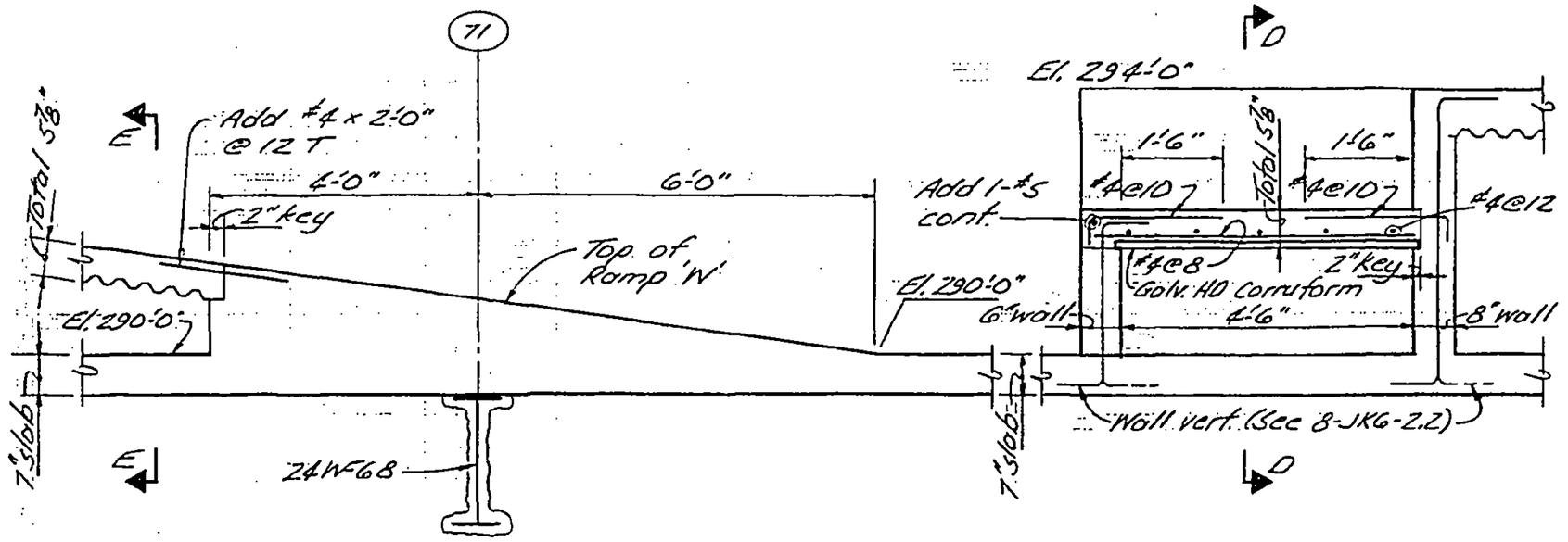

Section D-D
(½" = 1'-0")

Section E-E
(½" = 1'-0")

LICENSED PROFESSIONAL ENGINEER
LESLIE E. ROBERTSON
No. 34360
UNIVERSITY OF THE STATE OF NEW YORK

DESIGNED

DRAWN J. Adams

REVIEWED E.L.

8-JK8-50.3

SKILLING, HELLE, CHRISTIANSEN, ROBERTSON — Structural & Civil Engineers

PROJECT THE WORLD TRADE CENTER | TITLE SECTIONS AT EL. 290'-0" | DATE 9-26-69

REVISIONS

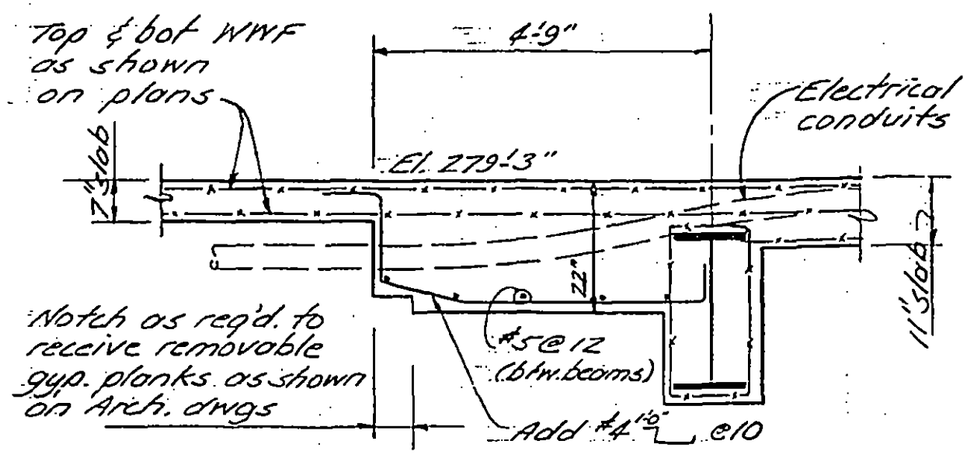

Section F-F
(½"=1'-0")

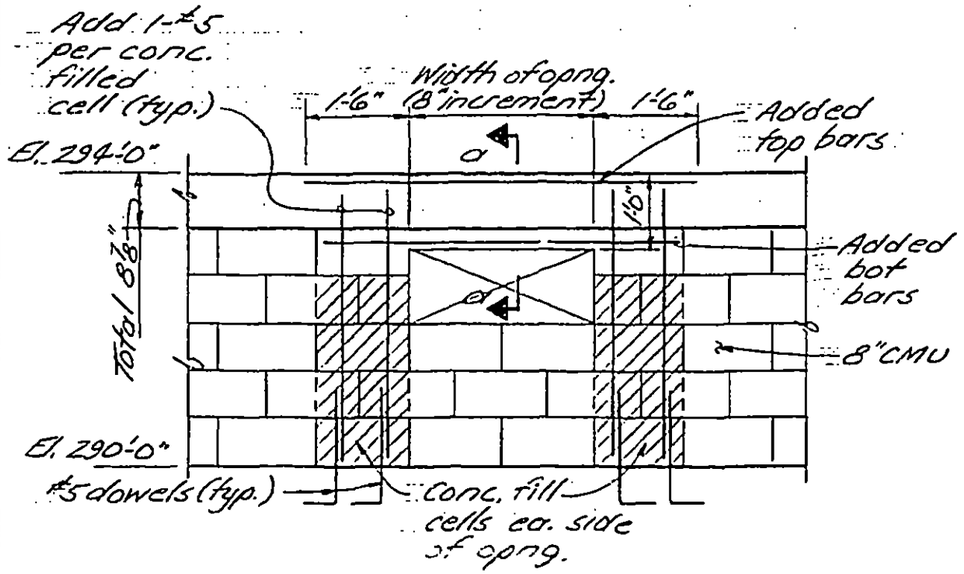

Section G-G
(½"=1'-0")

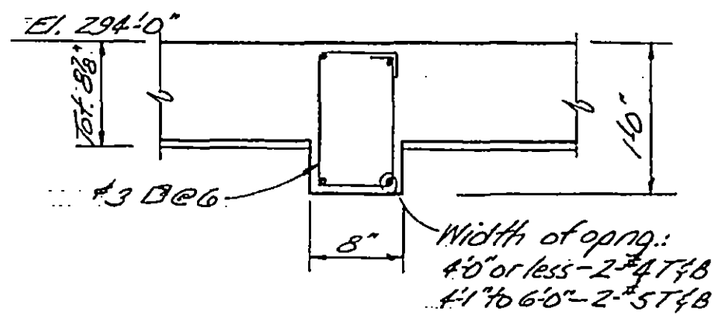

Section a-a
(½"=1'-0")

LICENSED PROFESSIONAL ENGINEER LESLIE E. ROBERTSON No. 34360 UNIVERSITY OF THE STATE OF NEW YORK

DESIGNED

DRAWN J. Adams

REVIEWED E.L.

8-JKB-50.4

SKILLING, HELLE, CHRISTIANSEN, ROBERTSON — Structural & Civil Engineers

PROJECT: THE WORLD TRADE CENTER | TITLE: SECTIONS AT EL. 290'-0" | DATE: 9-26-69

REVISIONS

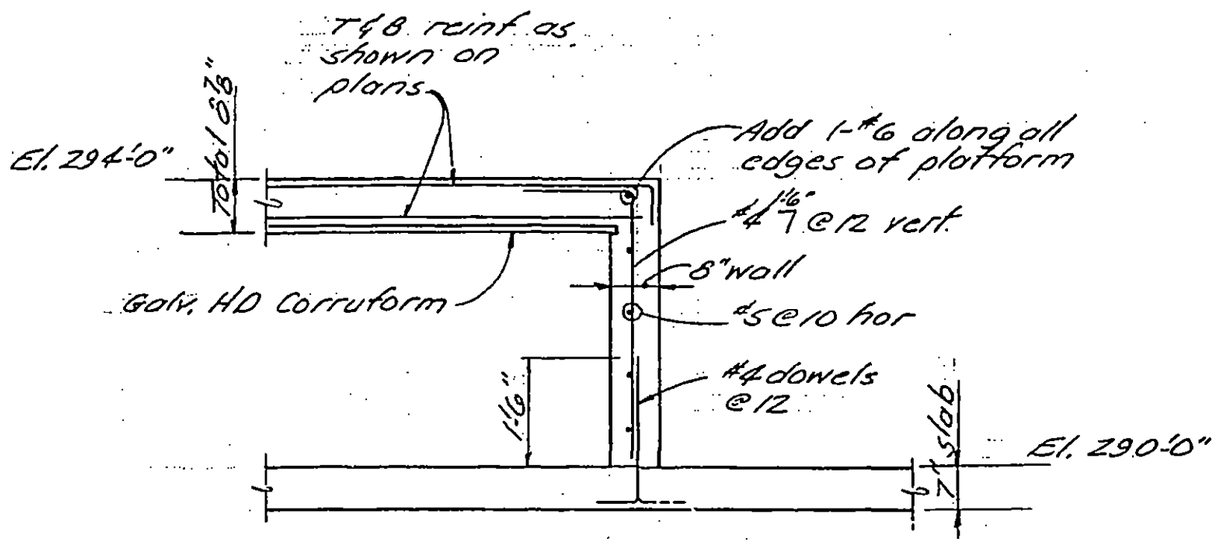

Where openings are required, see Sec. E-E on B-JK8-4

Section H-H
(½"=1'-0")

LICENSED PROFESSIONAL ENGINEER — LESLIE E. ROBERTSON — No. 34360 — UNIVERSITY OF THE STATE OF NEW YORK

DESIGNED

DRAWN J. Adams

REVIEWED E.L.

B-JK8-50.5

SKILLING, HELLE, CHRISTIANSEN, ROBERTSON — Structural & Civil Engineers

PROJECT THE WORLD TRADE CENTER | TITLE CONCRETE SUPPORT FOR 24"Φ STEAM MAIN | DATE 12-15-69

REVISIONS

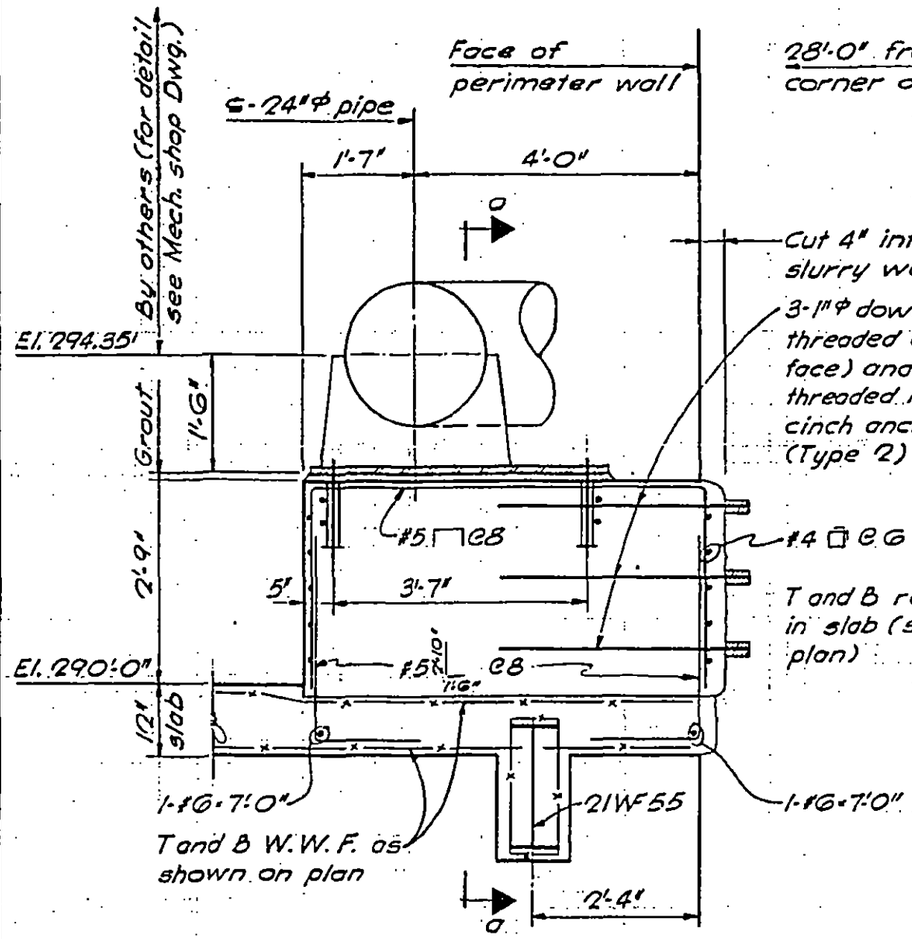

SECTION J-J
(½"=1'-0")

SECTION O-O
(½"=1'-0")

NOTES:

1. See Mech. shop Dwg. 57-121 (F&S Mfg. Corp.) for detail of pipe supporting assembly and A. bolts.
2. All concrete to be f'_c=3000 psi.

LICENSED PROFESSIONAL ENGINEER — LESLIE E. ROBERTSON — No. 34360 — UNIVERSITY OF THE STATE OF NEW YORK

DESIGNED

DRAWN G.K.

REVIEWED E.L.

8-JK8-50.6

SKILLING, HELLE, CHRISTIANSEN, ROBERTSON — Structural & Civil Engineers

PROJECT THE WORLD TRADE CENTER | TITLE SECTIONS AT EL. 290'-0" | DATE 1-16-70

REVISIONS

4-28-70

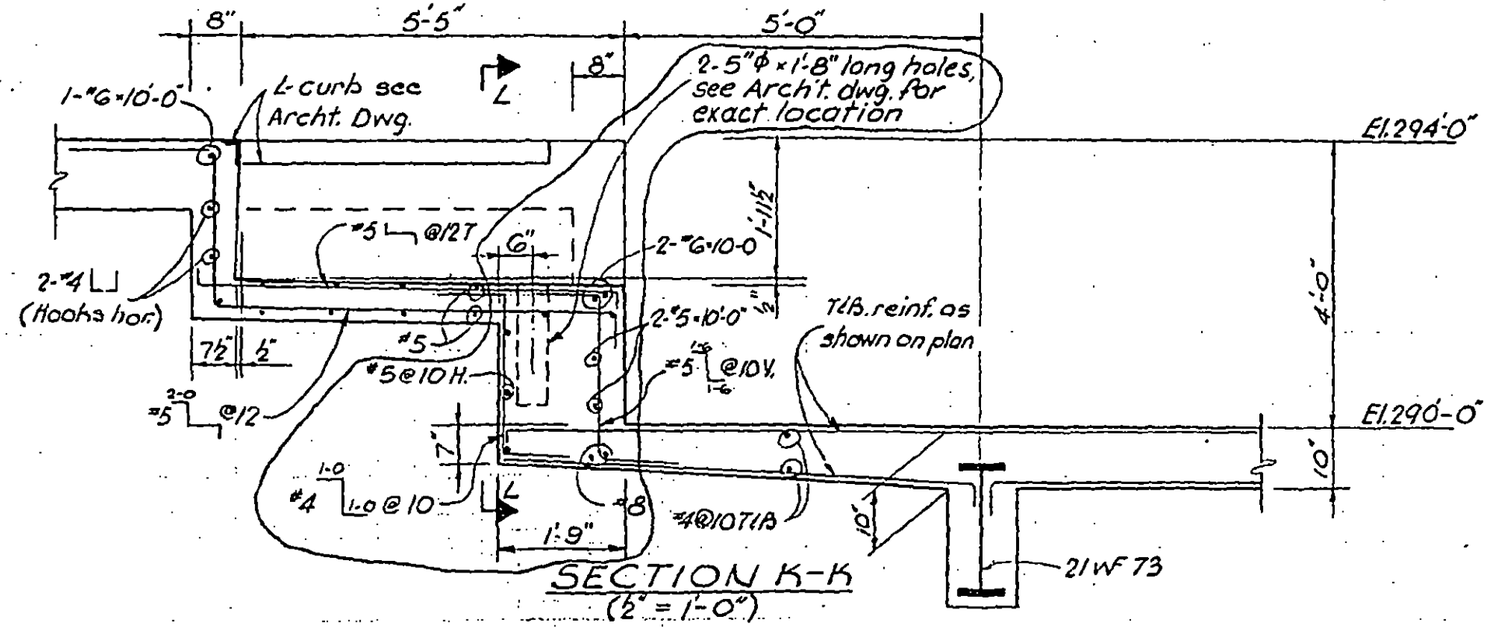

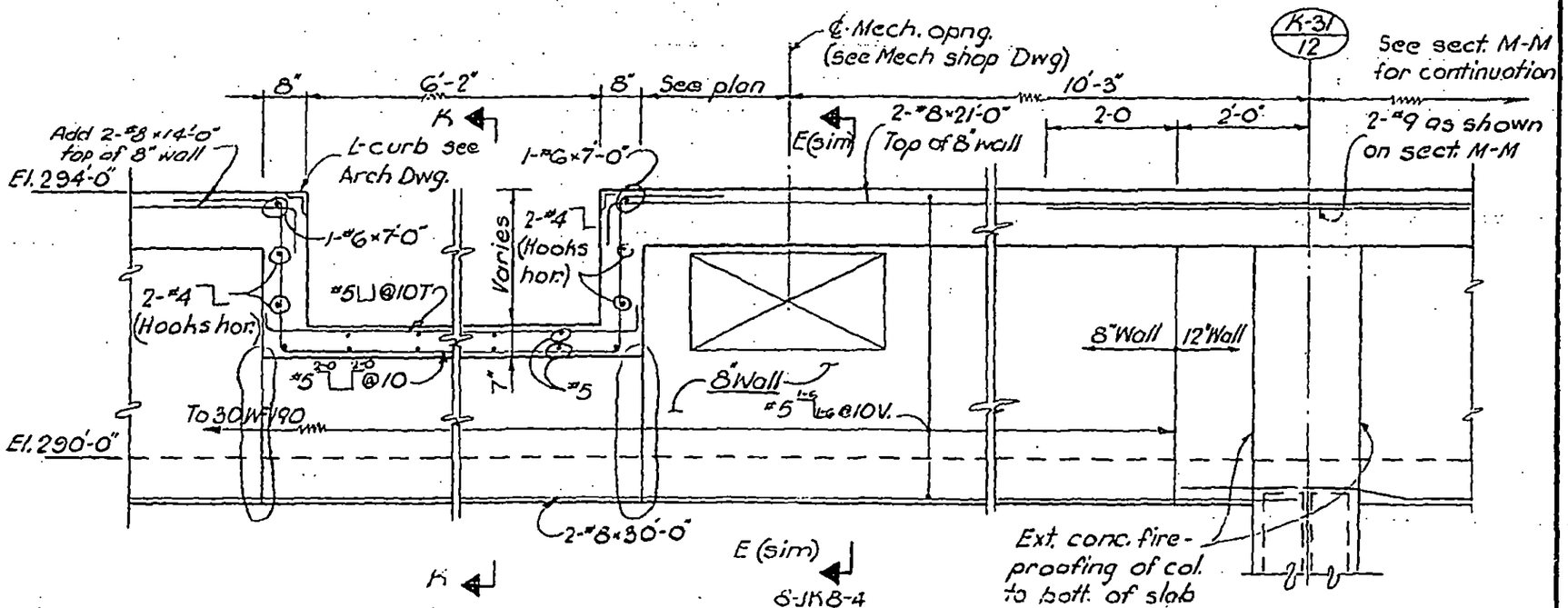

LICENSED PROFESSIONAL ENGINEER — LESLIE E. ROBERTSON — No. 34360 — UNIVERSITY OF THE STATE OF NEW YORK

DESIGNED E.L.

DRAWN D.C. Huggins

REVIEWED E.L.

8-JK8-50.7

SKILLING, HELLE, CHRISTIANSEN, ROBERTSON — Structural & Civil Engineers

PROJECT THE WORLD TRADE CENTER | TITLE SECTIONS AT EL. 290'-0" | DATE 1-16-70

REVISIONS

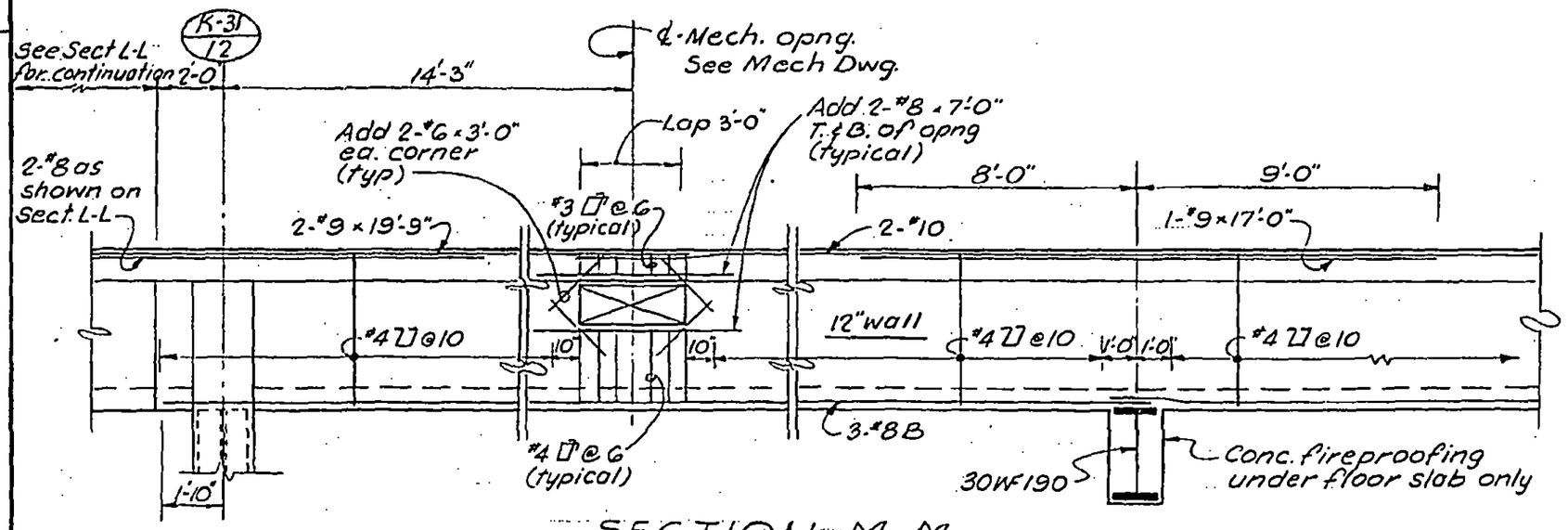

SECTION M-M
(4" = 1'-0")

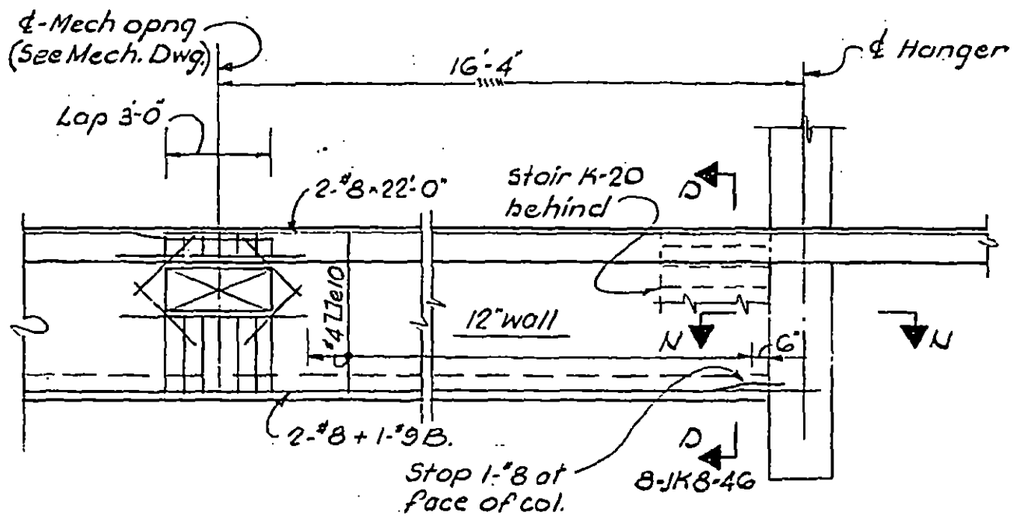

SECTION N1-N1 (CONT)
1/4" = 1'-0"

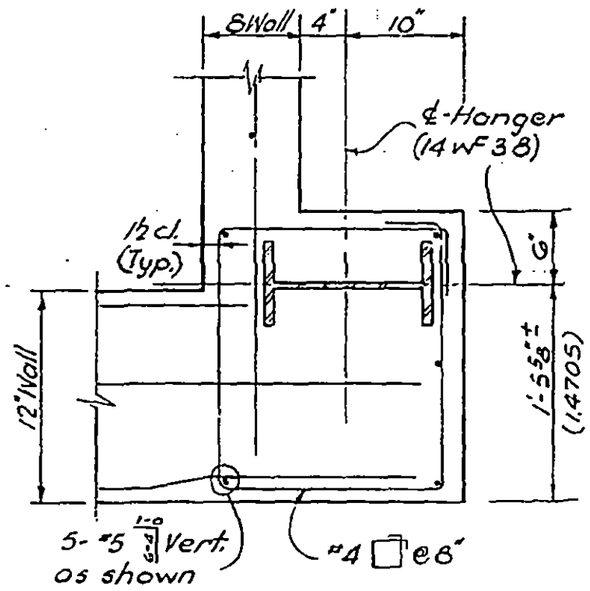

SECTION N-N
1/4" = 1'-0"

LICENSED PROFESSIONAL ENGINEER
LESLIE E. ROBERTSON
No 34360
UNIVERSITY OF THE STATE OF NEW YORK

DESIGNED

DRAWN D.C.Huggins

REVIEWED E.L.

8-JK8-50.8

SKILLING, HELLE, CHRISTIANSEN, ROBERTSON — Structural & Civil Engineers

PROJECT THE WORLD TRADE CENTER | TITLE SECTION AT El. 290'-0" | DATE 1-16-70

REVISIONS

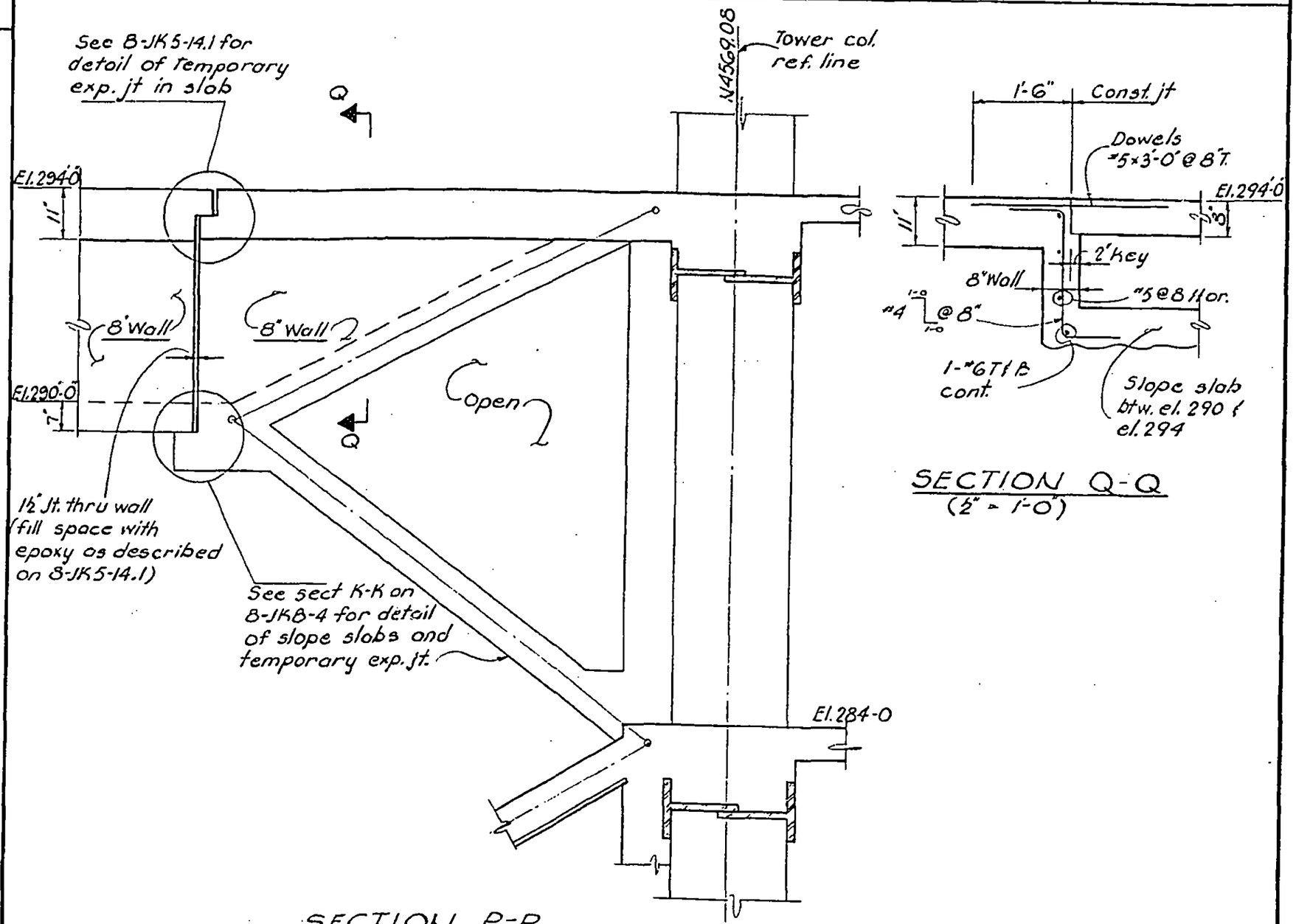

SECTION P-P
(½"-1'-0")

SECTION Q-Q
(½" = 1'-0")

LICENSED PROFESSIONAL ENGINEER
LESLIE E. ROBERTSON
No. 34360
UNIVERSITY OF THE STATE OF NEW YORK

DESIGNED

DRAWN D. Huggins

REVIEWED E.L.

8-JK8-50.9

SKILLING, HELLE, CHRISTIANSEN, ROBERTSON — Structural & Civil Engineers

PROJECT: THE WORLD TRADE CENTER | TITLE: SECTIONS AT EL 290'-0" | DATE: 1-16-70

REVISIONS

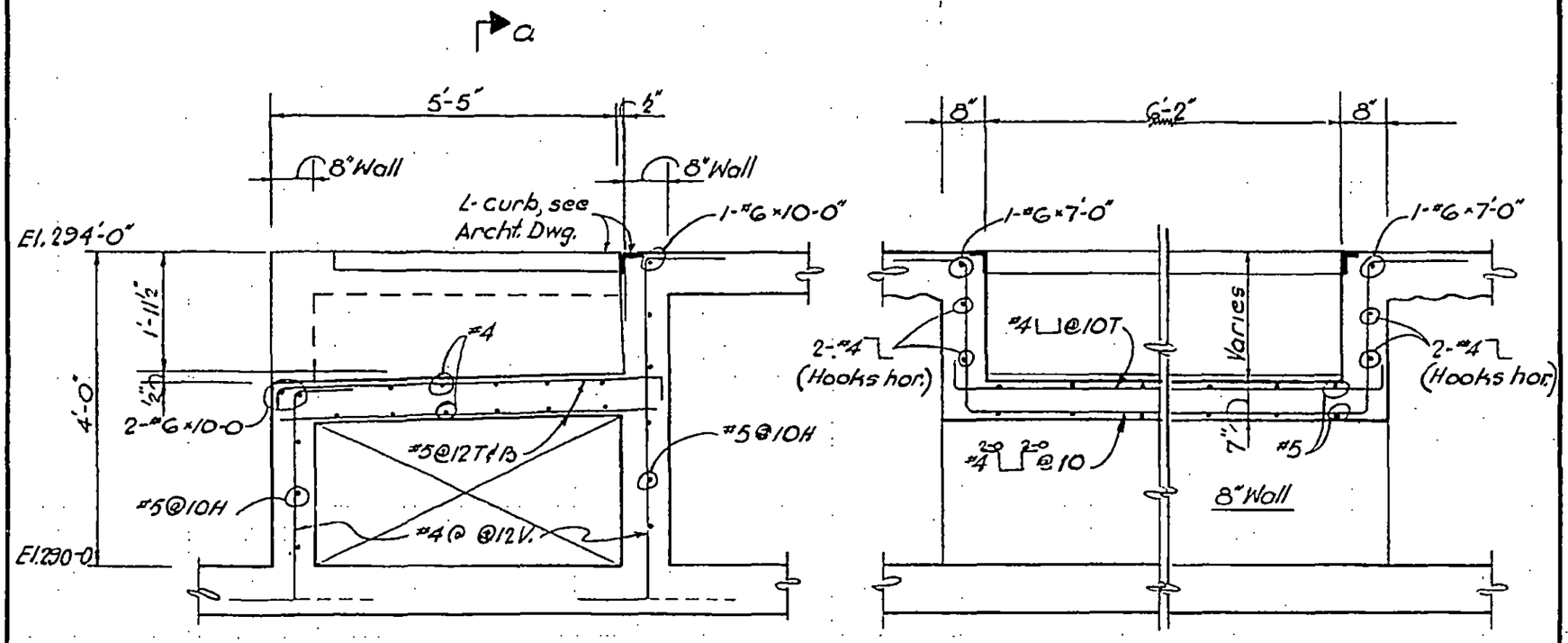

SECTION R-R
½"-1'-0"

Section a-a
½"-1'-0"

LICENSED PROFESSIONAL ENGINEER
LESLIE E. ROBERTSON
No. 34360
UNIVERSITY OF THE STATE OF NEW YORK

DESIGNED

DRAWN D.C. Huggins

REVIEWED E.L.

8-JK 8-50.10

SKILLING, HELLE, CHRISTIANSEN, ROBERTSON — Structural & Civil Engineers

PROJECT THE WORLD TRADE CENTER | TITLE SECTION AT El. 290'-0" | DATE 1-16-70

REVISIONS

4-23-70

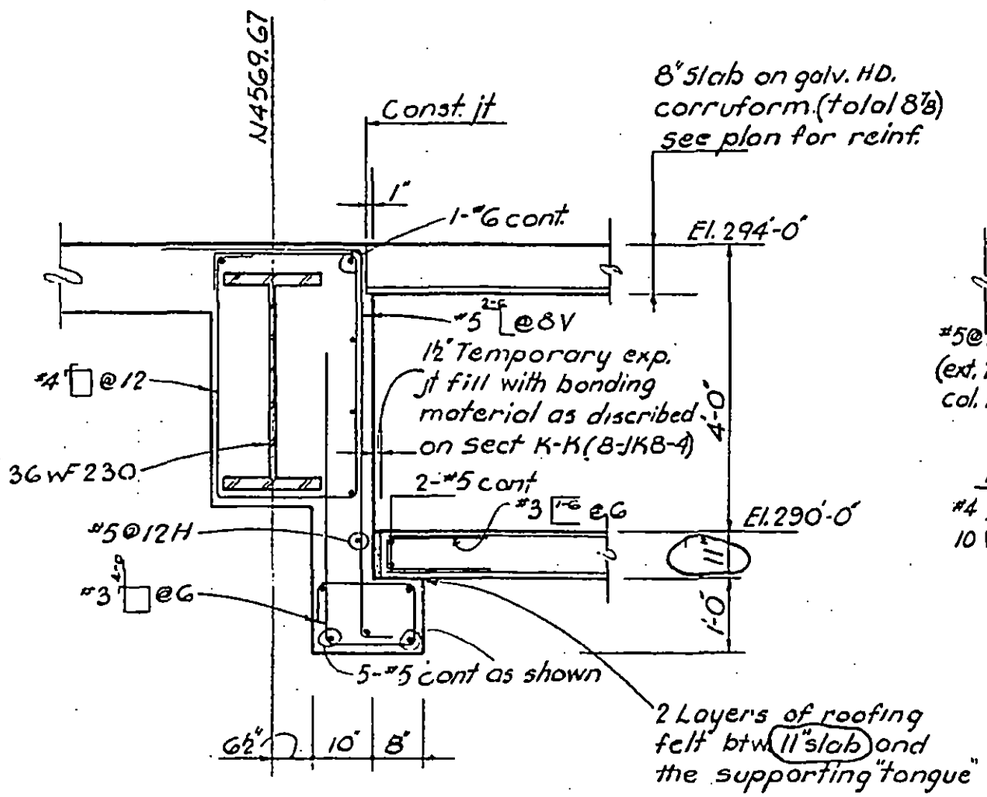

SECTION S-S
(½" = 1'-0")

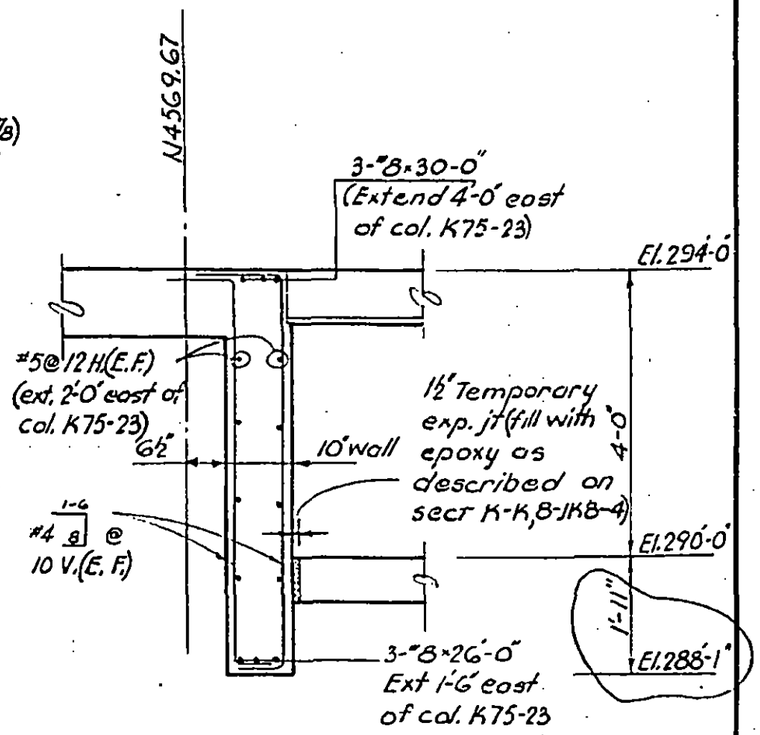

SECTION T-T
(½" = 1'-0")

LICENSED PROFESSIONAL ENGINEER
LESLIE E. ROBERTSON
No. 34360
UNIVERSITY OF THE STATE OF NEW YORK

DESIGNED

DRAWN D.C. Huggins

REVIEWED E.L.

8-JK8-50.11

SKILLING, HELLE, CHRISTIANSEN, ROBERTSON — Structural & Civil Engineers

PROJECT THE WORLD TRADE CENTER | TITLE SECTIONS AT El 290'-0" | DATE 1-16-70

REVISIONS

4-23-70

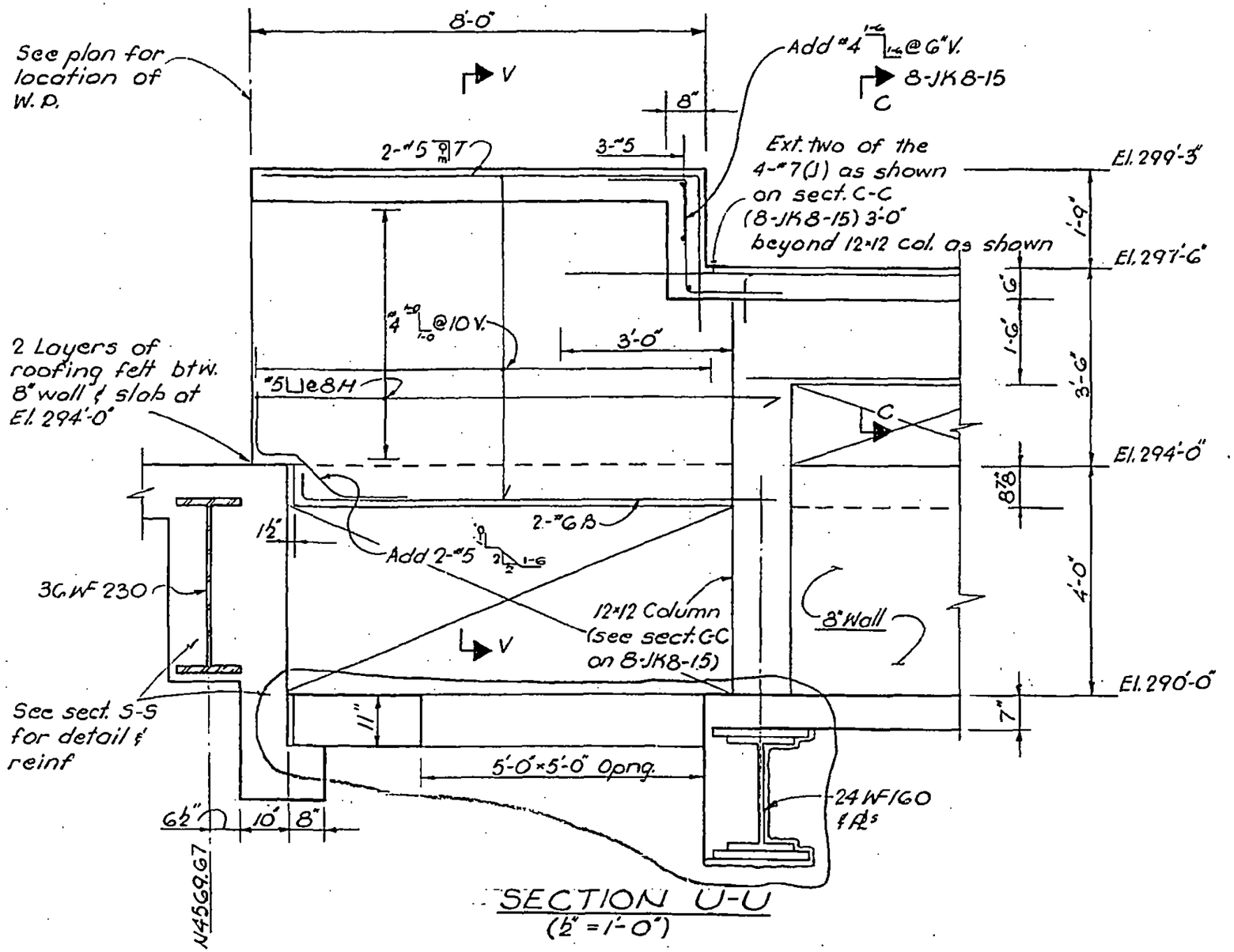

SECTION U-U
(½" = 1'-0")

LICENSED PROFESSIONAL ENGINEER
LESLIE E. ROBERTSON
No. 34360
UNIVERSITY OF THE STATE OF NEW YORK

DESIGNED

DRAWN D.C.Huggins

REVIEWED E.L.

8-JK 8-50.12

SKILLING, HELLE, CHRISTIANSEN, ROBERTSON — Structural & Civil Engineers

PROJECT THE WORLD TRADE CENTER | TITLE SECTIONS El. 290'-0" | DATE 1-16-70

REVISIONS

3-30-70

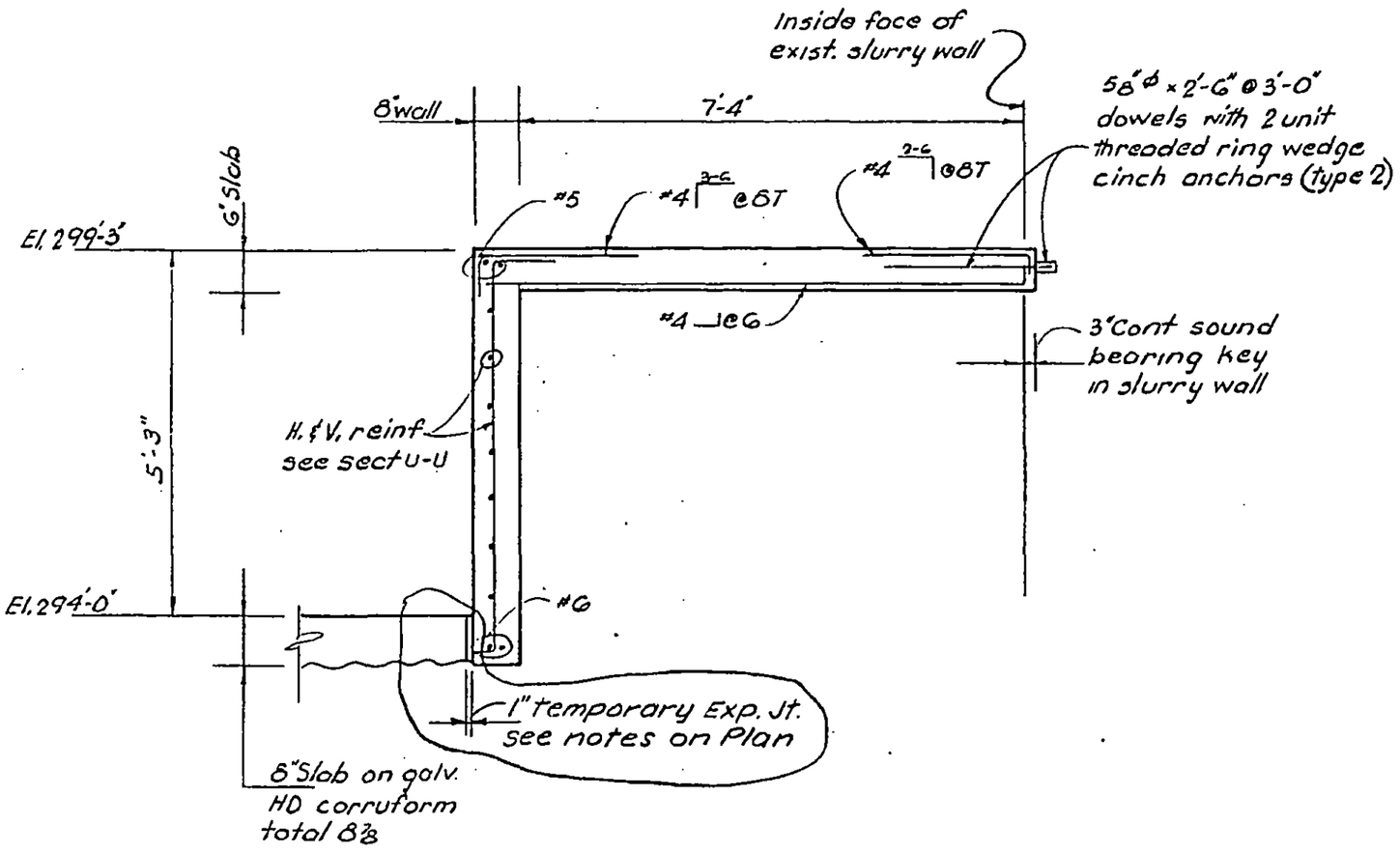

SECTION V-V
(½" = 1'-0")

LICENSED PROFESSIONAL ENGINEER
LESLIE E. ROBERTSON
No. 34360
UNIVERSITY OF THE STATE OF NEW YORK

DESIGNED

DRAWN D.C. Huggins

REVIEWED E.L.

8-JK8-50.13

1060-L,2